Product Selection Guide

Analog, Digital & Mixed-Signal ICs, Modules, Subsystems & Instrumentation, DC - 110 GHz

Automotive
Telematics & Sensors

Broadband
Cable Modem, CATV, DBS & VoIP
WiMAX, WiBro, WLAN & UWB

Cellular Infrastructure
GSM, GPRS, CDMA, TD-SCDMA,
WCDMA, UMTS & 4G/LTE

Fiber Optics & Networking
OC-48 to 400G

Microwave & mmWave Communications
Backhaul Radio Links
Multi-Pt Radios & VSAT

Military
C^3I, ECM & EW

Space
Payload Electronics

Test & Measurement
Commercial & Industrial Sensors
Test Equipment

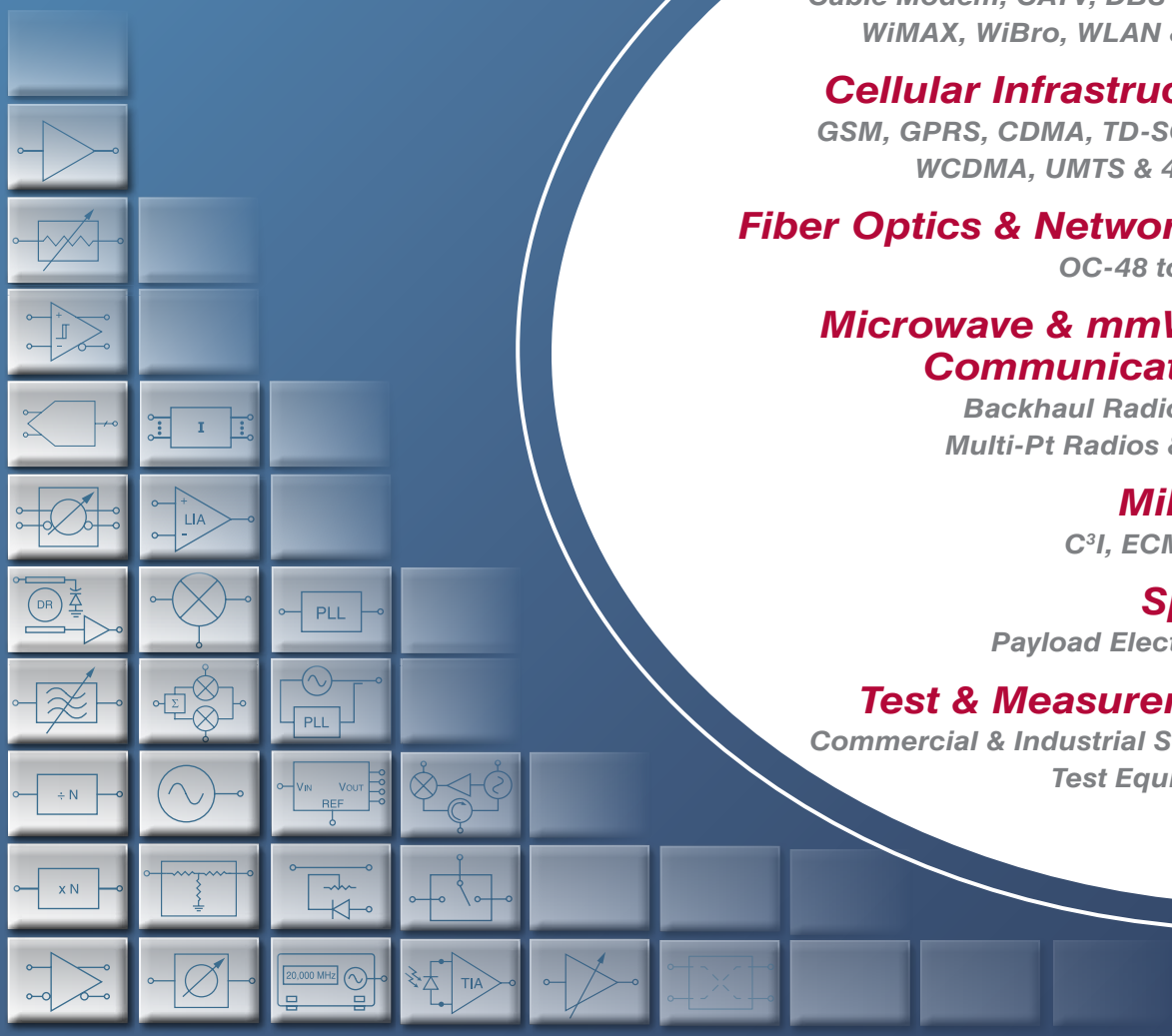

Hittite
MICROWAVE CORPORATION

May 2013

REF# SG-0513

Table Of Contents

Hittite Microwave Corporation is pleased to introduce our May 2013 Product Selection Guide summarizing over 1095 products including 22 new products. This selection guide organizes Hittite's portfolio by product line. Full specifications for each product are available at www.hittite.com. Click on "My Subscription" to receive the latest product releases.

General Information — Page

Customer Support 3
Sales Contact Information 56

New Products 5

New & Expanded Product Lines

GaN Power Amplifiers 5, 7
GaAs MMIC SP4T Reflective Switch 5
I/Q Downconverter 6
Sub-Harmonic Mixers 6
28 Gbps EML Driver 26
Optical Modulator Drivers 26
Frequency Dividers 37

RF & Microwave ICs

Amplifiers 7
Attenuators 11
Automatic Gain Control 12
DC Power Conditioning 12
Filters - Tunable 12
IF / Baseband Processing 13
I/Q Mixers / IRMs 13
I/Q Downconverter / Receivers 14
I/Q Upconverter / Transmitters 14
Mixers 14
Modulators/Demodulators 17
Passives 18
Phase Shifters 18
Power Detectors 18
SDLVAs 18
Switches 18
Transceivers 19
Variable Gain Amplifiers 20

Analog & Mixed-Signal ICs

Broadband Time Delays 26
Comparators 27
Crosspoint Switch 27
Data Converters 27
DC Power Conditioning 28
DC Power Management 28
High Speed Digital Logic 29
IF / Baseband Processing 30
Interface 30
Limiting Amplifiers 30
Mux & Demux 30
Optical Modulator Drivers 30
Signal Conditioners 31
Transimpedance Amplifiers 31

Clock & Timing ICs — Page

Clock Distribution 34
Clock Generators 34

LO Frequency Generation ICs

DC Power Conditioning 38
Filters - Tunable 38
Frequency Dividers & Detectors 38
Frequency Multipliers 38
Phase Locked Loop 39
PLL with Integrated VCOs 39
VCOs 40
PLOs 41

Connectorized Modules

Amplifiers 43
Attenuators 43
Dielectric Resonator Oscillators (DROs) 43
Frequency Dividers & Detectors 44
Frequency Multipliers 44
High Speed Digital Logic 44
I/Q Mixers 44
Mixers 44
Phase Shifters 44
SDLVAs 44
Switches 45
Synthesizer Module, MicroSynth® 45
VCOs 45

Instrumentation

Signal Generators 47

Market & Application Solutions

Automotive 21
Broadband 22
Cellular Infrastructure 22
Microwave & mmWave Communications, Test & Measurement & Sensors 25
Fiber Optics & Networking 32
Clock Generators for DC Clocking 34
Clock & Timing 35
LO Generation Applications 37

Military & Space Screening 49

Designer's Kits 50

Package Information 51

Part Number Index 52

Hittite MICROWAVE CORPORATION

How to Buy:

Hittite Microwave Corporation offers many convenient ways to order products and/or receive pricing and delivery information. Our order entry/MRP system assures customer sample requests and orders will be entered quickly, tracked easily, and completed accurately on-time.

Direct Sales

- **HMC Field Sales Offices:**
  You may contact our corporate or field sales offices listed on the back cover for assistance in purchasing Hittite products.
- **Purchase On-line: www.hittite.com**
  With Hittite Microwave's E-Commerce capability customers can enjoy the convenience of on-line ordering via a secure shopping cart interface. Products can be purchased using either a MasterCard, Visa, American Express or JCB card. Orders are confirmed within one business day with delivery information. Orders ship within 2 business days of confirmation, based on availability.
- **Purchase Orders via HMC Corporate Sales:**
  You may contact Hittite Microwave directly at (978) 250-3343. Purchase orders can be faxed to (978) 250-3373 or sent via email to sales@hittite.com. There is a minimum purchase order value of $500.00 (U.S. Dollars).

Distributors

- **Digi-Key:**
  Tel: 1-800-344-4539, Email: www.digikey.com/ContactUs SalesInquiry or Web: www.digikey.com
- **Future Electronics:**
  Tel: 1-800-675-1619, Email: www.futureelectronics.com/ContactUs or Web: www.futureelectronics.com

Worldwide Network of Sales Representatives

You may purchase our products through our network of manufacturer representatives listed on the back cover.

- ***European customers may also purchase products in Euros (€) directly from Hittite Microwave Deutschland GmbH (germany@hittite.com).***
- ***Japanese customers may also purchase products in Yen (¥) directly from Hittite KK - Japan (japan@hittite.com).***

Our Quality Policy:

Hittite Microwave Corporation is Committed to:

- *Being a supplier of products of the highest quality.*
- *Advancing state-of-the-art technology to support our products.*
- *Enhancing our competitive position with superior products.*

Hittite's Quality Policy Recognizes Responsibilities for Every Individual to:

- *Take the initiative to promote quality.*
- *Create an environment where the highest quality standards are maintained.*
- *Participate in continuous improvement practices.*

Quality & Product Support:

The Quality & Product Support Section of Our Web Site Includes:

- *Quality Assurance -*
  Product manufacturing, qualification & screening flows
- *Product Reliability*
- *Qualification Test Reports*

Product Application Support

- *Application Engineering Support*
- *Application Notes*
- *Mixer Spur Chart Calculator, Parametric Search & PLL Phase Noise Calculator*
- *Product Cross Reference*
- *Package & Layout Drawings -*
  Product outline, PCB land pattern and tape & reel drawings
- *Published Papers*
- *S-Parameter Files*

Data Sheets

- *Complete product data sheets can be found on our web site.*

HMC is ISO 9001:2008, AS9100-2009 and ANS/ESD S20.20-2007 certified. Every component is backed by every Hittite employee and subcontractor's commitment to total quality, thus providing our customers with products that meet or exceed all requirements, are delivered on-time and function reliability throughout their useful life.

What We Do

Hittite Microwave Corporation is an innovative designer and manufacturer of high performance integrated circuits (ICs), modules, subsystems and instrumentation for technically demanding digital, RF, microwave and millimeterwave applications covering DC to 110 GHz. The Company's standard and custom products apply analog, digital and mixed-signal semiconductor technologies, which are used in a wide variety of wireless / wired communication and sensor applications for Automotive, Broadband, Cellular Infrastructure, Fiber Optics & Networking, Microwave & Millimeterwave Communications, Military, Test & Measurement and Space markets. We offer over 1095 products across 36 product lines.

RF & Microwave ICs
Amplifiers
Attenuators
Automatic Gain Control
DC Power Conditioning
Filters - Tunable
IF / Baseband Processing
I/Q Mixers/IRMs
I/Q Downconverter/Receivers
I/Q Upconverters/Transmitters
Mixers
Modulators/Demodulators
Passives
Phase Shifters
Power Detectors
SDLVAs
Switches
Transceivers
Variable Gain Amplifiers

Analog & Mixed-Signal ICs
Broadband Time Delays
Comparators
Crosspoint Switches
Data Converters
DC Power Conditioning
DC Power Management
High Speed Digital Logic
IF/ Baseband Processing
Interface
Limiting Amplifiers
Mux & Demux
Optical Modulator Drivers
Signal Conditioners
Transimpedance Amplifiers

Clock & Timing ICs
Clock Distribution
Clock Generators

LO Freq. Generation ICs
DC Power Conditioning
Filters - Tunable
Freq. Dividers & Detectors
Freq. Mulitipliers
Phase Locked Loop
PLL with Integrated VCOs
VCOs + PLOs

Connectorized Modules
Amplifiers
Attenuators
DROs
Freq. Dividers & Detectors
Freq. Multipliers
High Speed Digital Logic
I/Q Mixers
Mixers
Phase Shifters
SDLVAs
Switches
Synthesizer Module, MicroSynth®
VCOs

Instrumentation
Signal Generators to 70 GHz

We design and supply custom analog and digital ICs, modules, subsystems and instrumentation, combining multiple functions for specific requirements. We select the most appropriate semiconductor and package technologies, uniquely balancing digital and analog integration techniques.

Our custom and standard products support a wide range of wireless / wired communications & radar applications for the following markets:

Automotive
Telematics & Sensors

Broadband
CATV, DBS, WiBro, WiMAX, WLAN, Fixed Wireless & UW

Cellular Infrastructure
GSM, GPRS, CDMA, WCDMA, UMTS, TD-SCDMA & 4G/LTE

Fiber Optic & Networking
OC-48 to 400G

Microwave & mmWave Communications
Backhaul Radio Links
Multi-Pt Radios & VSAT

Military
C^3I, ECM & EW

Space
Payload Electronics

Test & Measurement
Commercial / Industrial
Sensors & Test Equipment

AMPLIFIERS

GaN Power Amplifiers

Frequency (GHz)	Function	Gain (dB)	OIP3 (dBm)	Psat (dB)	Power Gain @ Psat (dB)	Bias Supply	Package	ECCN Code	Part Number
2 - 6	GaN MMIC Power Amplifier, 25W	22	+48	44.5	14	+28V @ 1100 mA	Chip	ITAR	**HMC1086**
2 - 6	GaN MMIC Flange Mount Power Amplifier, 25W	23	+46	44.5	11	+28V @ 1100 mA	F10	ITAR	**HMC1086F10**
2 - 20	GaN MMIC Power Amplifier, 8W	11	+45	39	5.5	+28V @ 850 mA	Chip	ITAR	**HMC1087**
2 - 20	GaN MMIC Flange Mount Power Amplifier, 8W	11	+43.5	38.5	6.5	+28V @ 850 mA	F10	ITAR	**HMC1087F10**

Linear & Power Amplifiers

Frequency (GHz)	Function	Gain (dB)	OIP3 (dBm)	NF (dB)	P1dB (dBm)	Bias Supply	Package	ECCN Code	Part Number
6 - 18	Medium Power Amplifier, 0.5 Watt	22	+35	-	25	+5V @220mA	LP4	EAR99	**HMC1082LP4E**
15 - 20	Power Amplifier, 2 Watt	26	+43.5	-	33.5	+6V @ 1100mA	LS6	3A001.b.2.c	**HMC6981LS6**
37 - 40	Power Amplifier, 1 Watt	22	+38	-	30	+6V @ 960mA	LS6	3A001.b.2.d	**HMC7229LS6**

DATA CONVERTERS

Low Power Analog-to-Digital Converters

Sample Rate (MSPS)	Function / Mode	Resloution (bits)	# of Channels	Power Dissipation	SNR (dBFS)	SFDR (dBc)	Package	ECCN Code	Part Number
80 / 105 / 125	Quad Channel	14	4	490 / 605 / 765 mW	74	85	LP7DE	3A991.c.3	**HMCAD1062**
80 / 105 / 125	Dual Channel	14	2	300 / 380 / 460 mW	74	85	LP7DE	3A991.c.3	**HMCAD1062B**
400	Dual Channel	14	2	750 mW / Channel	72	85	LG9E / LP9E	3A001.a.5.a.4	**HMCAD1063**
400	Dual Channel	16	2	1100 mW / Channel	76	90	LG9E	3A001.a.5.a.5	**HMCAD1073**

Track-and-Hold Amplifier

Input Frequency (GHz)	Function	Single Tone THD/SFDR (dB)	Maximum Clock Rate (GSPS)	Output Noise (mV RMS)	Hold Mode Feedthrough Rejection (dB)	Package	ECCN Code	Part Number
18	Dual Rank Track-and-Hold	55 / 56	4	1.4	>65	LC5	3A001.a.11.b	**HMC1061LC5**

FREQUENCY DIVIDERS *(PRESCALERS)* & DETECTORS

Input Frequency (GHz)	Function	Input Power (dBm)	Output Level (dBm)	Floor FOM (dBc/Hz)	Bias Supply	Package	ECCN Code	Part Number
0.01 - 3	Integer-N (2 - 32) PLL	-10 to +5	2 Vp-p	-155 (@ Fref = 100 MHz)	+5V @ 290mA	LP4	3A001.a.11.b	**HMC873LP4E**
0.01 - 3	Phase Frequency Detector w/ Lock Det. & Invert Function	-10 to +5	2 Vp-p	-155 (@ Fref = 100 MHz)	+5V @ 120mA	LP4	3A001.a.11.b	**HMC872LP4E**
0.01 - 3	6-Bit Counter (N = 2 - 64)	-10 to +5	2 dBm	-160 (@ Fin = 100 MHz, N = 2)	+5V @ 200mA	LP4	3A001.a.11.b	**HMC879LP4E**

I/Q MIXERS / IRMs - *I/Q Downconverter / Receiver*

RF Frequency (GHz)	Function	IF Frequency (GHz)	Conversion Gain (dB)	Noise Figure (dB)	Image Rejection (dBc)	IIP3 (dBm)	Package	ECCN Code	Part Number
27 - 34	I/Q Downconverter / Receiver	DC - 4	12	3	17	2	LP4	EAR99	**HMC1065LP4E**

MIXERS

Single, Double & Triple Balanced

RF Frequency (GHz)	Function	IF Frequency (GHz)	Conversion Gain (dB)	LO /RF Isolation (dB)	IIP3 (dBm)	Package	ECCN Code	Part Number
50 - 75	Double Balanced Mixer	DC - 26	-7.5	30	16	Chip	EAR99	**HMC1081**

Sub-Harmonic Mixer

RF Frequency (GHz)	Function	IF Frequency (GHz)	Conversion Gain (dB)	LO / RF Isolation (dB)	IIP3 (dBm)	Package	ECCN Code	Part Number
71 - 86	Sub-Harmonic	DC - 12	-11	28	6	Chip	EAR99	**HMC1058**

OPTICAL MODULATOR DRIVERS

Data Rate Max. (Gbps)	Function	Gain (dB)	Group Delay Variation (ps)	Additive Jitter (ps)	Output Voltage Max. (Vp-p)	Package	ECCN Code	Part Number
28.3	EML Driver	11	±7	0.27	2.2	LP3D	EAR99	**HMC7150LP3DE**
32	Optical Modulator Driver, Pre-Stage	15	±5	0.3	3	Chip	EAR99	**HMC1068**
32	Optical Modulator Driver	15	±5	0.3	7.5	Chip	EAR99	**HMC1069**

SWITCHES

Frequency (GHz)	Function	Insertion Loss (dB)	Isolation (dB)	Input P1dB (dBm)	Control Input (Vdc)	Package	ECCN Code	Part Number
28 - 30	SP4T	2.8	26	-	0 / -3V	LC4	EAR99	**HMC1084LC4**

GaN 25W Power Amplifier 2 to 6 GHz

New!

HMC1086

HMC1086F10

Features

- High Output Power: +45 dBm
- High Output IP3: +48 dBm
- Small Signal Gain: 22 dB
- +28V @ 1.1 A

GaN 8W Power Amplifier 2 to 20 GHz

New!

HMC1087

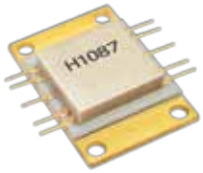

HMC1087F10

Features

- High Output Power: +39 dBm
- High Output IP3: +45 dBm
- Small Signal Gain: 11 dB
- +28V @ 850 mA

GaN Power Amplifiers for General Communications, Test Instrumentation, and Radar Applications.

HMC1084LC4 - GaAs MMIC SP4T Reflective Switch, 23 - 30 GHz

New!

Features

- Broadband Performance: 23 - 30 GHz
- High Isolation: 26 dB
- Insertion Loss: 2.8 dB
- High Power Handling: >27 dBm
- 24 Lead 4x4mm SMT Package: 16mm²

Insertion Loss RFIN to RF1 vs. Temperature

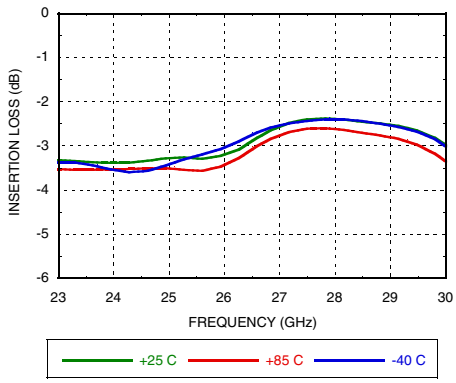

Input IP3 vs. Temperature @ 10 dBm/tone

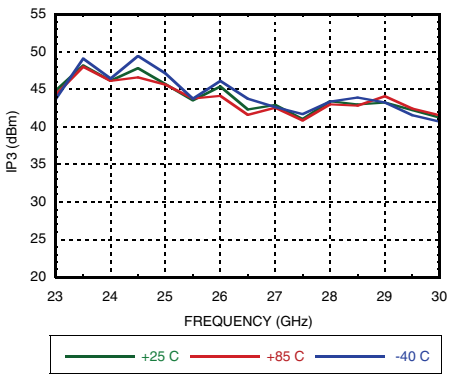

Ideal for Microwave Radio, Satcom, & Sensor Applications.

New & Expanded Product Lines

HMC1065LP4E - I/Q Downconverter, 27 - 34 GHz

NEW!

24 Lead 4 x 4 SMT Package

Features

- High Conversion Gain: 13 dB
- Excellent Image Rejection: 17 dBc
- High Input IP3: +2 dBm
- High 2LO/RF Isolation: 45 dB

Conversion Gain vs. Temperature, USB

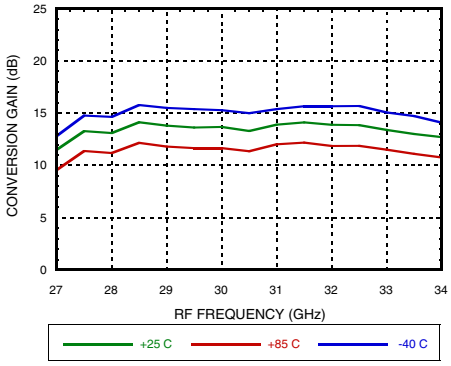

2LO Isolation

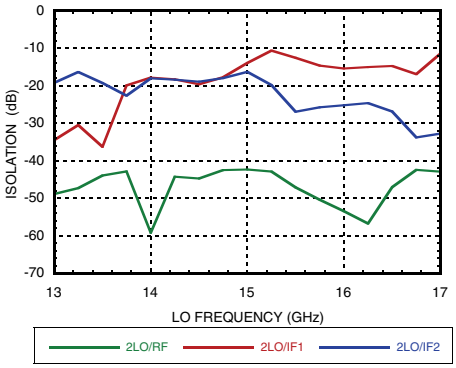

Ideal for Point-to-Point and Point-to-Multi-Point Radio.

HMC1057 & HMC1058 - Sub-Harmonic MMIC Mixers, 71 - 86 GHz

NEW!

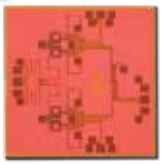

HMC1057

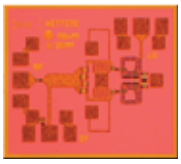

HMC1058

Features

- Passive: No DC Bias Required
- Wide IF Bandwidth: DC to 12 GHz
- High LO/RF Isolation: up to 30 dB
- High 2LO/RF Isolation: up to 50 dB
- Upconversion & Downconversion Applications

Conversion Gain, USB vs. Temerature
LO = 4 GHz, USB

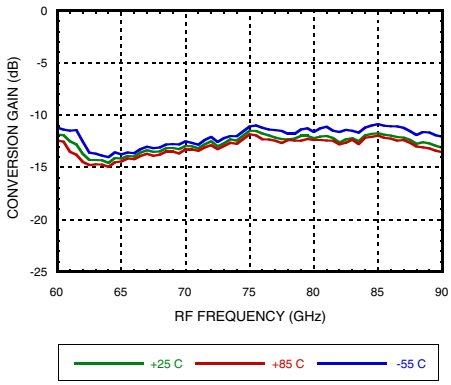

Image Rejection, USB vs. LO Power

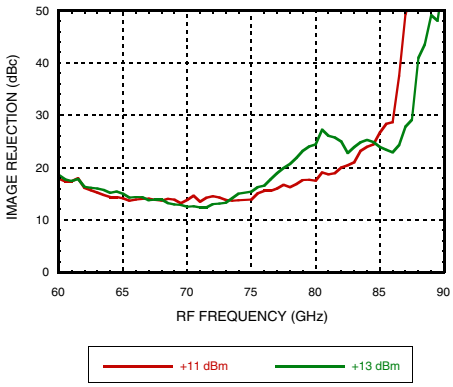

Amplifier & Mixer Solutions for Backhaul Radios to 90 GHz.

AMPLIFIERS

	Frequency (GHz)	Function	Gain (dB)	OIP3 (dBm)	Psat (dB)	Power Gain @ Psat (dB)	Bias Supply	Package	ECCN Code	Part Number
GaN Power Amplifiers										
	0.01 - 10	GaN MMIC Power Amplifier, 10W	11	+47	40	+5.5	+48V @ 1100 mA	Chip	3A001.b.2.b	HMC999
NEW!	2 - 6	GaN MMIC Power Amplifier, 25W	22	+48	44.5	14	+28V @ 1100 mA	Chip	ITAR	HMC1086
NEW!	2 - 6	GaN MMIC Flange Mount Power Amplifier, 25W	23	+46	44.5	11	+28V @ 1100 mA	F10	ITAR	HMC1086F10
NEW!	2 - 20	GaN MMIC Power Amplifier, 8W	11	+45	39	5.5	+28V @ 850 mA	Chip	ITAR	HMC1087
NEW!	2 - 20	GaN MMIC Flange Mount Power Amplifier, 8W	11	+43.5	38.5	6.5	+28V @ 850 mA	F10	ITAR	HMC1087F10

AMPLIFIERS

Frequency (GHz)	Function	Gain (dB)	OIP3 (dBm)	NF (dB)	P1dB (dBm)	Bias Supply	Package	ECCN Code	Part Number
Low Noise Amplifiers									
0.175 - 0.66	Low Noise	24	37	0.5	19	+5V @ 90 mA	LP3	EAR99	HMC616LP3E
0.23 - 0.66	Low Noise, Dual Channel	22	37	0.5	19	+5V @ 97 mA	LP4	EAR99	HMC816LP4E
0.3 - 3.0	Low Noise, High IP3	15	37	1.5	22	+5V @ 90 mA	SOT26	EAR99	HMC374E
0.3 - 3.0	Low Noise Amplifier	15	35	1.6	17	+3.3V @ 75 mA	SC70	EAR99	HMC374SC70E
0.55 - 1.2	Low Noise	16	37	0.5	21	+5V @ 88 mA	LP5	EAR99	HMC617LP3E
0.55 - 1.2	Low Noise, Dual Channel	16	37	0.5	20.5	+5V @ 95 mA	LP4	EAR99	HMC817LP4E
0.6 - 1.4	Low Noise	32	40	0.9	21.5	+5V @ 254 mA	LP4	EAR99	HMC718LP4E
0.7 - 1.2	Low Noise with Failsafe Bypass	16	33	0.9	13	+5V @ 57 mA	LP3	EAR99	HMC668LP3E
0.7 - 2.2	Low Noise	22	36	1.7	24	+5V @ 227 mA	LP3	EAR99	HMC758LP3E
1 - 11	Low Noise	17	30	1.5	18	+5V @ 55 mA	LP4	EAR99	HMC753LP4E [1]
1 - 12	Low Noise	17	28	1.5	19	+5V @ 55 mA	Chip	EAR99	HMC-ALH444 [1]
1.2 - 3.0	Low Noise	26	21	1.3	11.5	+5V @ 21 mA	LP3	EAR99	HMC548LP3E
1.3 - 2.9	Low Noise	34	39	1	21.5	+5V @ 272 mA	LP4	EAR99	HMC719LP4E
1.7 - 2.2	Low Noise	19	36	0.75	20	+5V @ 117 mA	LP3	EAR99	HMC618LP3E
1.7 - 2.2	Low Noise with Failsafe Bypass	17	29	1.4	12	+5V @ 86 mA	LP3	EAR99	HMC669LP3E
1.7 - 2.2	Low Noise, Dual Channel	20.5	35	0.85	21	+5V @ 112 mA	LP4	EAR99	HMC818LP4E
2 - 12	Low Noise	15	25	1.8	13	+4V @ 45 mA	LC4	EAR99	HMC772LC4 [1]
2.1 - 2.9	Low Noise	19	33	0.9	19	+5V @ 95 mA	LP3	EAR99	HMC715LP3E
2.3 - 2.5	Low Noise	19	12	1.7	6	+3V @ 8.5 mA	SOT26	EAR99	HMC286E
2.3 - 2.7	Low Noise	19	29.5	0.75	16.5	+5V @ 59 mA	LP2	EAR99	HMC667LP2E
2.3 - 2.7	Low Noise with Bypass	20	31	1.1	17	+5V @ 74 mA	LP3	EAR99	HMC605LP3E
2.4 - 2.5	Transceiver, Front End	13	10	3	5	+3V @ 24 mA	MS8G	EAR99	HMC310MS8GE
3.1 - 3.9	Low Noise	18	33	1	19	+5V @ 65 mA	LP3	EAR99	HMC716LP3E
3.3 - 3.8	Low Noise with Bypass	19	29	1.2	16	+5V @ 40 mA	LP3	EAR99	HMC593LP3E
3.4 - 3.8	Low Noise with Bypass	16	18	2	7	+3V @ 9 mA	LP3	EAR99	HMC491LP3E
3.5 - 7.0	Low Noise	15.5	28	2.4	16	+5V @ 50 mA	Chip	EAR99	HMC392
3.5 - 7.0	Low Noise	16	30	2.5	16	+5V @ 55 mA	LC4	EAR99	HMC392LC4
3.5 - 7.0	Low Noise	15	28	3	16	+5V @ 65 mA	LH5	EAR99	HMC392LH5
4.8 - 6.0	Low Noise with Bypass	15	26	1.5	14	+5V @ 42 mA	LP3	EAR99	HMC604LP3E
4.8 - 6.0	Low Noise	16.5	31.5	1.1	18.5	+5V @ 73 mA	LP3	EAR99	HMC717LP3E
5 - 6	Low Noise	9	13	2.5	2	+3V @ 6 mA	MS8G	EAR99	HMC318MS8GE
5 - 6	Low Noise	12	10	2.5	9	+3V @ 25 mA	MS8G	EAR99	HMC320MS8GE
5 - 10	Low Noise	20	28	1.7	16	+3.5V @ 80 mA	Chip	EAR99	HMC902
5 - 10	Low Noise	19	28	1.8	16	+3.5V @ 80 mA	LP3	EAR99	HMC902LP3E
5 - 20	Low Noise	13	26	2.2	16	+5V @ 30 mA	Chip	EAR99	HMC-ALH435 [1]
6 - 17	Low Noise	18	25	1.7	14	+3.5V @ 80 mA	LP3	EAR99	HMC903LP3E
6 - 18	Low Noise	19	26	1.6	15	+3.5V @ 80 mA	Chip	EAR99	HMC903
6 - 20	Low Noise	22	20	2.3	10	+3V @ 53 mA	Chip	EAR99	HMC565
6 - 20	Low Noise	21	20	2.5	10	+3V @ 53 mA	LC5	EAR99	HMC565LC5
6 - 26.5	Low Noise	22	18	2.5	10	+3.5V @ 45 mA	LC4	EAR99	HMC963LC4
7 - 13.5	Low Noise	17	24	1.8	12	+3V @ 51 mA	Chip	EAR99	HMC564
7 - 14	Low Noise	17	25	1.8	13	+3V @ 51 mA	LC4	EAR99	HMC564LC4
7 - 17	Low Noise	21	20	1.8	15	+3V @ 65 mA	Chip	EAR99	HMC516
7.5 - 26.5	Low Noise	13	23	2.5	13	+3.5V @ 70 mA	LC4	EAR99	HMC962LC4
9 - 18	Low Noise	20	25	2	14	+3V @ 65 mA	LC5	EAR99	HMC516LC5
12 - 16	Medium Power LNA	23	34	2.5	25	+5V @ 200 mA	LP5	EAR99	HMC490LP5E [1]
12 - 17	Medium Power LNA	27	35	2	26	+5V @ 200 mA	Chip	EAR99	HMC490 [1]
13 - 25	Low Noise	21	13	3.5	5	+3V @ 41 mA	Chip	EAR99	HMC342
13 - 25	Low Noise	22	20	3.5	9	+3V @ 43 mA	LC4	EAR99	HMC342LC4
14 - 27	Low Noise	19.5	-	2.2	17	+4V @ 90 mA	LC4B	5A991.h	HMC504LC4B

[1] Amplifiers that benefit from Hittite Active Bias Controllers

SMT & Chip (Die) Products

AMPLIFIERS

Frequency (GHz)	Function	Gain (dB)	OIP3 (dBm)	NF (dB)	P1dB (dBm)	Bias Supply	Package	ECCN Code	Part Number
14 - 27	Low Noise	18	-	2.5	14	+4V @ 90 mA	Chip	5A991.h	HMC-ALH216 [1]
14 - 27	Low Noise	20	-	2	14	+4V @ 90 mA	Chip	5A991.h	HMC-ALH476 [1]
17 - 26	Low Noise	19	23	2.2	11	+3V @ 65 mA	Chip	EAR99	HMC517
17 - 26	Low Noise	19	23	2.5	13	+3V @ 67 mA	LC4	EAR99	HMC517LC4
17 - 27	Low Noise	25	25	2.2	13	+4V @ 73 mA	LC4	EAR99	HMC751LC4
18 - 31	Low Noise	15	23	3.5	11	+3V @ 75 mA	LC4	EAR99	HMC519LC4
18 - 32	Low Noise	15	23	2.8	12	+3V @ 65 mA	Chip	3A001.b.2.d	HMC519
18 - 40	Low Noise	10	-	3.9	12	+5V @ 45 mA	Chip	3A001.b.2.d	HMC-ALH445
20 - 32	Low Noise	15	23	3	12	+3V @ 65 mA	Chip	3A001.b.2.d	HMC518
21 - 29	Low Noise	13	19	2.5	8	+3V @ 35 mA	LC3B	EAR99	HMC341LC3B
22 - 26.5	Low Noise	25	-	3	12	+2.5V @ 52 mA	Chip	5A991.h	HMC-ALH311 [1]
24 - 28	Low Noise	25	26	2.5	13	+3V @ 70 mA	LC4	EAR99	HMC752LC4 [1]
24 - 30	Low Noise	13	16	2.5	6	+3V @ 30 mA	Chip	EAR99	HMC341
24 - 32	Low Noise	21	-	2	7	+5V @ 68 mA	Chip	3A001.b.2.d	HMC-ALH364
24 - 36	Low Noise	23	17	2	8	+3V @ 58 mA	Chip	3A001.b.2.d	HMC263
24 - 36	Low Noise	20	18	2.2	8	+3V @ 58 mA	LP4	3A001.b.2.d	HMC263LP4E
24 - 40	Low Noise	12	-	3.5	13	+4V @ 45 mA	Chip	3A001.b.2.d	HMC-ALH244
24 - 40	Low Noise	22	-	2	11	+5V @ 66 mA	Chip	3A001.b.2.d	HMC-ALH369
24 - 40	Low Noise	11.5	-	4	15	+4V @ 60 mA	Chip	3A001.b.2.d	HMC-ALH140 [1]
24 - 43.5	Low Noise	22	22	2.7	12	+2.5V @ 70 mA	LP3C	3A001.b.2.d	HMC1040LP3CE
27 - 33	Low Noise	20	-	3	12	+2.5V @ 52 mA	Chip	3A001.b.2.d	HMC-ALH313 [1]
28 - 36	Low Noise	21	24	2.8	12	+3V @ 82 mA	LP4	3A001.b.2.d	HMC566LP4E
29 - 36	Low Noise	20	23.5	2.8	12	+3V @ 80 mA	Chip	3A001.b.2.d	HMC566
35 - 45	Low Noise	16	-	2	6	+4V @ 87 mA	Chip	3A001.b.2.d	HMC-ALH376
37 - 42	Low Noise	22	-	3.5	12	+2.5V @ 52 mA	Chip	3A001.b.2.d	HMC-ALH310 [1]
57 - 65	Low Noise	21	-	4	12	+2.5V @ 64 mA	Chip	3A001.b.2.f	HMC-ALH382 [1]
71 - 86	Low Noise	13	-	5	7	+2.4V @ 30 mA	Chip	3A001.b.2.f	HMC-ALH508
71 - 86	Low Noise	14	-	5	7	+2V @ 50 mA	Chip	3A001.b.2.f	HMC-ALH509
Broadband Gain Blocks ***(Listed by P1dB Output Power)***									
DC - 6	SiGe Gain Block	15.5	22	3	8	+5V @ 25 mA	MP86	EAR99	HMC474MP86E
DC - 6	SiGe Gain Block	15	20	3	8	+3V @ 25 mA	SC70	EAR99	HMC474SC70E
DC - 6	SiGe Gain Block	20	25	2.5	12	+5V @ 35 mA	MP86	EAR99	HMC476MP86E
DC - 6	SiGe Gain Block	19	24	2.5	12	+5V @ 35 mA	SC70	EAR99	HMC476SC70E
DC - 10	HBT Gain Block	15	24	4.5	13	+5V @ 56 mA	Chip	EAR99	HMC397
DC - 10	HBT Gain Block	15	25	4	13	+5V @ 50 mA	Chip	EAR99	HMC405
DC - 6	HBT Gain Block	17	27	6.5	14	+5V @ 50 mA	SOT26	EAR99	HMC313E
DC - 8	HBT Gain Block	12	30	6	14	+5V @ 56 mA	Chip	EAR99	HMC396
DC - 4	HBT Gain Block	15	28	4.5	15	+5V @ 54 mA	Chip	EAR99	HMC395
DC - 8	HBT Gain Block	15	30	5	15	+5V @ 54 mA	SC70	EAR99	HMC311SC70E
DC - 6	HBT Gain Block	14.5	32	4.5	15.5	+5V @ 56 mA	LP3	EAR99	HMC311LP3E
DC - 6	HBT Gain Block	16	31.5	4.5	15.5	+5V @ 54 mA	ST89	EAR99	HMC311ST89E
DC - 4	SiGe Gain Block	24	31	2.5	17	+5V @ 62 mA	SC70	EAR99	HMC478SC70E
DC - 4	SiGe Gain Block	22	32	2	18	+5V @ 62 mA	MP86	EAR99	HMC478MP86E
DC - 4	SiGe Gain Block	22	33	3	18	+5V @ 62 mA	ST89	EAR99	HMC478ST89E
DC - 5	SiGe Gain Block	15	34	4	18	+8V @ 72 mA	MP86	EAR99	HMC479MP86E
DC - 5	SiGe Gain Block	15	34	4	18	+8V @ 75 mA	ST89	EAR99	HMC479ST89E
DC - 5	Dual SiGe Gain Block	15	34	4	18	+8V @ 75 mA	MS8G	EAR99	HMC469MS8GE
DC - 5	SiGe Gain Block	20	33	3.5	19	+8V @ 79 mA	ST89	EAR99	HMC481ST89E
DC - 10	pHEMT Gain Block	14	30	7	20	+5V @ 76 mA	LP2	EAR99	HMC788LP2E
DC - 5	SiGe Gain Block	19	34	2.9	20	+8V @ 82 mA	ST89	EAR99	HMC480ST89E
DC - 5	SiGe Gain Block	20	33	3.5	20	+8V @ 74 mA	MP86	EAR99	HMC481MP86E
DC - 5	Dual SiGe Gain Block	20	34	3.2	20	+8V @ 80 mA	MS8G	EAR99	HMC471MS8GE
DC - 4	HBT Gain Block	21	33	4	21	+5V @ 82 mA	ST89	EAR99	HMC589ST89E
0.2 - 4.0	Low Noise, High IP3, pHEMT Gain Block	13	38	2.3	22	+5V @ 110 mA	ST89	EAR99	HMC639ST89E
0.2 - 4.0	Low Noise, High IP3, pHEMT Gain Block	13	40	2.2	22	+5V @ 155 mA	ST89	EAR99	HMC636ST89E
DC - 1	HBT Gain Block	22	37	2.8	22	+5V @ 88 mA	ST89	EAR99	HMC580ST89E
DC - 4.5	HBT Gain Block	21	35	3.5	22	+8V @ 110 mA	ST89	EAR99	HMC475ST89E
DC - 5	SiGe Gain Block	19	36	4	22	+8V @ 110 mA	ST89	EAR99	HMC482ST89E
7 - 15	HBT Gain Block	15	28	4	15	+5V @ 44 mA	LP3B	EAR99	HMC3653LP3BE

[1] Amplifiers that benefit from Hittite Active Bias Controllers

AMPLIFIERS

Frequency (GHz)	Function	Gain (dB)	OIP3 (dBm)	NF (dB)	P1dB (dBm)	Bias Supply	Package	ECCN Code	Part Number
CATV Amplifiers									
0.04 - 0.96	Low Noise, Dual Output	5	27	3.5	12	+5V @ 120 mA	MS8G	EAR99	HMC549MS8GE
0.05 - 1.0	Low Noise, 75 Ohm	14	39	2.2	19	+5V @ 120 mA	ST89	EAR99	HMC599ST89E
0.04 - 1.0	50 / 75 Ohm Differential Gain Block	16	40	2.5	23.5	+5V @ 270 mA	LP4B	EAR99	HMC770LP4BE
0.05 - 3.0	HBT Gain Block	15	40	3.5	18	+5V @ 88 mA	ST89	EAR99	HMC740ST89E
0.05 - 3.0	HBT Gain Block	20	42	2.5	18.5	+5V @ 96 mA	ST89	EAR99	HMC741ST89E
DC - 1	HBT Gain Block, 75 Ohm	14	38	5.5	21	+5V @ 160 mA	S8G	EAR99	HMC754S8GE
Driver Amplifiers									
0.7 - 2.8	HBT Driver Amplifier	18	42	3.8	25	+5V @ 125 mA	ST89	EAR99	HMC789ST89E
0.8 - 3.8	Driver Amplifier	18	30	7.5	17	+5V @ 53 mA	SOT26	EAR99	HMC308E
3.0 - 4.5	HBT Driver Amplifier	21	36	5	23.5	+5V @ 130 mA	MS8G	EAR99	HMC326MS8GE
17.5 - 41	Driver Amplifier	21	27	-	20	+5V @ 295 mA	Chip	3A001.b.2.d	HMC-AUH256
Linear & Power Amplifiers									
0.4 - 2.5	High IP3 Amp, 1/2 Watt	12.5	42	6	27	+5V @ 150 mA	ST89	EAR99	HMC454ST89E
1.6 - 2.2	Medium Power Amplifier	22	40	5.5	27	+3.6V @ 270 mA	QS16G	EAR99	HMC413QS16GE
5 - 6	Medium Power Amplifier	17	38	6	26	+5V @ 300 mA	MS8G	EAR99	HMC406MS8GE
5 - 7	Medium Power Amplifier	15	40	5.5	25	+5V @ 230 mA	MS8G	EAR99	HMC407MS8GE
5 - 18	Medium Power Amplifier	18	28	7	19.5	+5V @ 120 mA	LP3	EAR99	HMC451LP3E
5 - 20	Medium Power Amplifier	22	30	6.5	20	+5V @ 127 mA	Chip	EAR99	HMC451
5 - 20	Medium Power Amplifier	19	30	7	19	+5V @ 114 mA	LC3	EAR99	HMC451LC3
6 - 18	Medium Power Amplifier	15.5	32	4.5	20	+5V @ 95 mA	Chip	EAR99	HMC441
6 - 18	Medium Power Amplifier	17	32	4.5	20	+5V @ 95 mA	LC3B	EAR99	HMC441LC3B
NEW! 6 - 18	Medium Power Amplifier, 0.5 Watt	22	+35	-	25	+5V @ 220 mA	LP4E	EAR99	HMC1082LP4E
6.5 - 13.5	Medium Power Amplifier	14	29	4.5	18	+5V @ 95 mA	LP3	EAR99	HMC441LP3E
7 - 15.5	Medium Power Amplifier	15	32	4.8	20	+5V @ 95 mA	LH5 Hermetic	EAR99	HMC441LH5
7 - 15.5	Medium Power Amplifier	16	30	4.5	19	+5V @ 90 mA	LM1	EAR99	HMC441LM1
9.5 - 11.5	Medium Power Amplifier	29.5	33	6	27	+5V @ 310 mA	LC4	EAR99	HMC608LC4
12 - 30	Medium Power Amplifier	16	25	7	16	+5V @ 101 mA	Chip	EAR99	HMC383
12 - 30	Medium Power Amplifier	15	25	7.5	16.5	+5V @ 100 mA	LC4	EAR99	HMC383LC4
16 - 33	Medium Power Amplifier	17	33	-	24	+5V @ 400 mA	Chip	5A991.h	HMC-APH596
17 - 24	Medium Power Amplifier	24	34	4	25	+5V @ 250 mA	Chip	EAR99	HMC498
17 - 24	Medium Power Amplifier	22	36	4	25	+5V @ 250 mA	LC4	EAR99	HMC498LC4
17 - 30	Medium Power Amplifier	20	31	-	22	+4.5V @ 400 mA	Chip	5A991.h	HMC-APH196
17.5 - 24	Medium Power Amplifier	14	28	6.5	21.5	+5V @ 85 mA	LM1	EAR99	HMC442LM1
17.5 - 25.5	Medium Power Amplifier	15	28	5.5	22	+5V @ 85 mA	Chip	EAR99	HMC442 [1]
17.5 - 25.5	Medium Power Amplifier	13	27	8	22	+5V @ 84 mA	LC3B	EAR99	HMC442LC3B [1]
21 - 32	Medium Power Amplifier	16	33	5	24	+5V @ 200 mA	Chip	3A001.b.2.d	HMC499 [1]
21 - 32	Medium Power Amplifier	17	34	5	23	+5V @ 200 mA	LC4	3A001.b.2.d	HMC499LC4 [1]
33.5 - 46.5	Medium Power Amplifier, 0.5 Watt	21	35	-	24.5	+6V @ 500 mA	Chip	3A001.b.2.d	HMC1014
34 - 42	Medium Power Amplifier	18.5	29	6.5	18	+5V @ 120 mA	Chip	3A001.b.2.d	HMC-ABH264 [1]
34 - 46.5	Medium Power Amplifier	22	34	-	24	+6V @ 250 mA	Chip	3A001.b.2.f	HMC1016
37 - 40	Medium Power Amplifier	20	35	-	26	+5V @ 640 mA	Chip	3A001.b.2.d	HMC-APH510
37 - 45	Medium Power Amplifier	21	32	-	23	+5V @ 475 mA	Chip	3A001.b.2.d	HMC-APH403
50 - 66	Medium Power Amplifier	24	25	-	17	+5V @ 220 mA	Chip	3A001.b.2.f	HMC-ABH241
55 - 65	Medium Power Amplifier	13	25	-	16	+5V @ 80 mA	Chip	3A001.b.2.f	HMC-ABH209 [1]
71 - 76	Medium Power Amplifier	24	-	-	17.5	+4V @ 130 mA	Chip	3A001.b.2.f	HMC-AUH318 [1]
71 - 76	Medium Power Amplifier	13	-	-	20	+4V @ 240 mA	Chip	3A001.b.2.f	HMC-APH633
71 - 86	Medium Power Amplifier	15	-	-	15	+4V @ 130 mA	Chip	3A001.b.2.f	HMC-AUH320 [1]
81 - 86	Medium Power Amplifier	22	-	-	17.5	+4V @ 160 mA	Chip	3A001.b.2.f	HMC-AUH317 [1]
81 - 86	Medium Power Amplifier	12	-	-	19	+4V @ 240 mA	Chip	3A001.b.2.f	HMC-APH634
0.01 - 10	GaN Power Amplifier, 10 Watt	11	47	-	38	+48V @ 1100 mA	Chip	3A001.b.2.b	HMC999
0.1 - 22	Power Amplifier, 2 Watt	12	41	5	31	+15V @ 500 mA	Chip	3A001.b.2.c	HMC998
0.1 - 22.0	Power Amplifier, 2 Watt	11	41	-	31	+15V @ 500 mA	LP5	3A001.b.2.c	HMC998LP5E
0.4 - 2.2	Power Amplifier, 1 Watt	21	49	6.5	30	+5V @ 510 mA	ST89	EAR99	HMC452ST89E
0.4 - 2.2	Power Amplifier, 1.6 Watt	20.5	49	6.5	32	+5V @ 725 mA	ST89	EAR99	HMC453ST89E
0.4 - 2.7	Power Amplifier, 2 Watt	16	48	8.5	33	+5V @ 700 mA	LP4	EAR99	HMC921LP4E
0.45 - 2.2	Power Amplifier, 1 Watt	22.5	48	7	30	+5V @ 485 mA	QS16G	EAR99	HMC452QS16GE
0.45 - 2.2	Power Amplifier, 1.6 Watt	21.5	51	6.5	33	+5V @ 725 mA	QS16G	EAR99	HMC453QS16GE
DC - 32	Power Amplifier, 1/2 Watt	14	36	4	28	+10V @ 250 mA	Chip	EAR99	HMC994
1.7 - 2.2	Power Amplifier, 1 Watt	27	46	5	30.5	+5V @ 500 mA	QS16G	EAR99	HMC457QS16GE
2.3 - 2.8	Power Amplifier, 1 Watt	31	45	5	32.5	+5V @ 430 mA	LP4	EAR99	HMC755LP4E
3 - 4	Power Amplifier, 1/2 Watt	21	40	5	27	+5V @ 250 mA	MS8G	EAR99	HMC327MS8GE

[1] Amplifiers that benefit from Hittite Active Bias Controllers

SMT & Chip (Die) Products

AMPLIFIERS

Frequency (GHz)	Function	Gain (dB)	OIP3 (dBm)	NF (dB)	P1dB (dBm)	Bias Supply	Package	ECCN Code	Part Number
3.3 - 3.8	Power Amplifier, 1 Watt	31	45.5	5.8	30.5	+5V @ 615 mA	LP4	EAR99	HMC409LP4E
5.1 - 5.9	Power Amplifier, 1 Watt	20	43	6	30	+5V @ 750 mA	LP3	EAR99	HMC408LP3E
6 - 9.5	Power Amplifier, 1 Watt	21	40	-	30.5	+7V @ 820 mA	LP5	EAR99	HMC590LP5E
6 - 9.5	Power Amplifier, 2 Watt	18	41	-	33	+7V @ 1340 mA	LP5	3A001.b.2.b	HMC591LP5E
6 - 10	Power Amplifier, 1 Watt	25	41	-	31.5	+7V @ 820 mA	Chip	3A001.b.2.b	HMC590
6 - 10	Power Amplifier, 2 Watt	23	43	-	33.5	+7V @ 1340 mA	Chip	3A001.b.2.b	HMC591
7 - 9	Power Amplifier, 2 Watt	26	40	6.5	33.5	+7V @ 1.3A	Chip	3A001.b.2.b	HMC486
7 - 9	Power Amplifier, 2 Watt	22	40	7	32	+7V @ 1.3A	LP5	3A001.b.2.b	HMC486LP5E
9 - 12	Power Amplifier, 2 Watt	20	36	8	32	+7V @ 1.3A	LP5	3A001.b.2.b	HMC487LP5E
9 - 13.3	Power Amplifier, 2 Watt	34	42	5.5	33	+6V @ 1400 mA	Chip	3A001.b.2.b	HMC952
9 - 14	Power Amplifier, 2 Watt	33	43	-	34	+6V @ 1400 mA	LP5G	3A001.b.2.b	HMC952LP5GE
9 - 14	Power Amplifier w/ Power Detector, 5 Watt	34	43	-	36.5	+7V @ 2400 mA	Chip	3A001.b.2.b	HMC1053
10 - 13	Power Amplifier, 1 Watt	19	38	-	31	+7V @ 750 mA	Chip	3A001.b.2.b	HMC592
12 - 16	Power Amplifier, 1 Watt	13	34	9	31	+7V @ 1.3A	LP5	EAR99	HMC489LP5E
12.5 - 15.5	Power Amplifier, 2 Watt	30	42	-	34.5	+7V @ 1200 mA	Chip	3A001.b.2.b	HMC949
12.5 - 15.5	Power Amplifier, 4 Watt	28	44	-	36	+7V @ 1200 mA	Chip	3A001.b.2.b	HMC950
12.5 - 15.5	Power Amplifier, 2 Watt	27	40	-	32	+6V @ 1200 mA	LP5	3A001.b.2.b	HMC965LP5E
12 - 16	PA with Power Detector, 3 Watt	27	41	-	34.5	+7V @ 1200 mA	LP5G	3A001.b.2.b	HMC995LP5GE
NEW! 15 - 20	Power Amplifier, 2 Watt	26	43.5	-	33.5	+6V @ 1100 mA	LS6	3A001.b.2.c	HMC6981LS6
15 - 27	Power Amplifier, 1 Watt	17	37	-	29	+5V @ 1.44A	Chip	EAR99	HMC-APH462
16 - 24	Power Amplifier, 1 Watt	23	41	-	31	+7V @ 790 mA	Chip	3A001.b.2.c	HMC756
16 - 24	Power Amplifier, 1/2 Watt	22	37	-	29	+7V @ 395 mA	Chip	EAR99	HMC757
16 - 24	Power Amplifier, 1/2 Watt	20.5	34.5	-	26.5	+5V @ 400 mA	LP4	EAR99	HMC757LP4E
18 - 20	Power Amplifier, 1 Watt	17.5	38.5	-	30	+5V @ 900 mA	Chip	3A001.b.2.c	HMC-APH478
21 - 24	Power Amplifier, 1 Watt	17	39	-	30.5	+5V @ 950 mA	Chip	3A001.b.2.c	HMC-APH518
22 - 26.5	Power Amplifier, 1/2 Watt	20	33	7	26.5	+5V @ 400 mA	LP4	EAR99	HMC863LP4E
22.5 - 26.5	Power Amplifier, 1 Watt	17	40	-	30	+5V @ 950 mA	Chip	3A001.b.2.c	HMC-APH608
24 - 29.5	Power Amplifier, 1/2 Watt	22	-	-	26.5	+6V @ 360 mA	Chip	EAR99	HMC863
24 - 29.5	Power Amplifier, 1 Watt	27	40	-	29	+6V @ 750 mA	Chip	3A001.b.2.c	HMC864
24 - 31.5	Power Amplifier, 1.5 Watt	22	43	-	34	+5.5V @ 1200 mA	LP5	3A001.b.2.c	HMC943LP5E
27 - 31.5	Power Amplifier, 1/2 Watt	14	37	-	28	+5V @ 900 mA	Chip	3A001.b.2.c	HMC-APH460
27 - 34	Power Amplifier, 1 Watt	17.5	37	-	29	+5V @ 800 mA	Chip	3A001.b.2.d	HMC693
27.3 - 33.5	Power Amplifier, 2 Watt	23	43	-	33	+6V @ 1200 mA	Chip	3A001.b.2.d	HMC906
27.5 - 33.5	Power Amplifier, 1 Watt	24	40	-	29	+6V @ 600 mA	Chip	3A001.b.2.d	HMC1024
29 - 37	Power Amplifier, 2 Watt	22	42	6	32	+6V @ 1200 mA	Chip	3A001.b.2.d	HMC1029
37 - 40	Power Amplifier, 1 Watt	15	37	-	28	+5V @ 1.08A	Chip	3A001.b.2.d	HMC-APH473
37 - 40	Power Amplifier, 1 Watt	21	38	-	30.5	+6V @ 900 mA	Chip	3A001.b.2.d	HMC968
NEW! 37 - 40	Power Amplifier, 1 Watt	22	38	-	30	+6V @ 960 mA	LS6	3A001.b.2.d	HMC7229LS6
40 - 43.5	Power Amplifier, 1 Watt	22	38	-	29	+6V @ 900 mA	Chip	EAR99	HMC969
Wideband (Distributed) Amplifiers									
DC - 20	Wideband LNA	14	28	2.5	16	+8V @ 60 mA	Chip	EAR99	HMC460 [1]
DC - 20	Wideband LNA	14	29.5	2.5	17	+8V @ 75 mA	LC5	EAR99	HMC460LC5 [1]
0.3 - 20.0	Wideband LNA	16	27	1.7	15	+7V @ 70mA	Chip	EAR99	HMC1049
0.3 - 20.0	Wideband LNA	15	29	1.8	14.5	+7V @ 70mA	Chip	EAR99	HMC1049LP5E
2 - 20	Wideband LNA	15	26.5	2.5	15	+5V @ 63 mA	Chip	EAR99	HMC462
2 - 20	Wideband LNA	13	25	2.5	14	+5V @ 66 mA	LP5	EAR99	HMC462LP5E
2 - 20	Wideband LNA with AGC	14	28	2.5	19	+5V @ 60 mA	Chip	EAR99	HMC463 [1]
2 - 20	Wideband LNA with AGC	13	26	3	18	+5V @ 60 mA	LP5	EAR99	HMC463LP5E [1]
2 - 20	Wideband LNA with AGC	14	28	2.5	18	+5V @ 60 mA	LH250	EAR99	HMC463LH250
2 - 20	Wideband LNA	10	-	3.5	10	+2V @ 55 mA	Chip	EAR99	HMC-ALH102
2 - 22	Wideband LNA	16	-	1.7	14	+4V @ 45 mA	Chip	EAR99	HMC-ALH482
DC - 20	Wideband Driver	17	30	2.5	22	+8V @ 160 mA	Chip	EAR99	HMC465 [1]
DC - 20	Wideband Driver	15	28	3	23	+8V @ 160 mA	LP5	EAR99	HMC465LP5E [1]
DC - 35	Wideband Driver	15	-	-	21	+5V @ 200 mA	Chip	3A001.b.2.d	HMC-AUH249
DC - 43	Wideband Driver	14	-	5.4	16.5	+5V @ 180 mA	Chip	3A001.b.2.d	HMC-AUH232
0.5 - 65	Wideband Driver	10	-	-	-	+8V @ 60 mA	Chip	3A001.b.2.f	HMC-AUH312
2 - 35	Wideband Driver	12.5	27	3	18	+8V @ 80 mA	Chip	3A001.b.2.d	HMC562 [1]
5 - 17	Wideband Driver	31	30	8	23	+5V @ 180 mA	Chip	EAR99	HMC633 [1]
5 - 20	Wideband Driver	22	31	7.5	23	+5V @ 180 mA	Chip	EAR99	HMC634 [1]
5 - 20	Wideband Driver	21	29	7.5	22	+5V @ 180 mA	LC4	EAR99	HMC634LC4 [1]
5.5 - 17	Wideband Driver	30	30	8	23	+5V @ 180 mA	LC4	EAR99	HMC633LC4 [1]

[1] Amplifiers that benefit from Hittite Active Bias Controllers

AMPLIFIERS

Frequency (GHz)	Function	Gain (dB)	OIP3 (dBm)	NF (dB)	P1dB (dBm)	Bias Supply	Package	ECCN Code	Part Number
18 - 40	Wideband Driver	19.5	29	8	23	+5V @ 280 mA	Chip	3A001.b.2.d	HMC635
18 - 40	Wideband Driver	18.5	27	7	22	+5V @ 280 mA	LC4	3A001.b.2.d	HMC635LC4
DC - 6	Wideband Power Amplifier	14	45	5	29	+12V @ 400 mA	Chip	EAR99	HMC637
DC - 6	Wideband Power Amplifier	13	40	5	29	+12V @ 400 mA	LP5	EAR99	HMC637LP5E
DC - 10	Wideband Power Amplifier	12	41	6	28.5	+12V @ 300 mA	Chip	EAR99	HMC619
DC - 10	Wideband Power Amplifier	12	41	6	28	+12V @ 300 mA	LP5	EAR99	HMC619LP5E
DC - 15	Wideband Power Amplifier	19	35	2	26.5	+8V @ 300 mA	Chip	EAR99	HMC659
DC - 15	Wideband Power Amplifier	19	35	2.5	27.5	+8V @ 300 mA	LC5	EAR99	HMC659LC5
DC - 18	Wideband Power Amplifier	17	32	3	25	+8V @ 290 mA	Chip	EAR99	HMC459
DC - 20	Wideband Power Amplifier	14	36	4	28	+10V @ 400 mA	Chip	3A001.b.2.c	HMC559
DC - 22	Wideband Power Amplifier	14	40	2.5	28	+11V @ 400 mA	Chip	3A001.b.2.c	HMC797
DC - 22	Wideband Power Amplifier	13.5	39	4	28	+10V @ 400 mA	LP5	EAR99	HMC797LP5E
DC - 28	Wideband Power Amplifier	13	38	4	27	+10V @ 250 mA	LP5	EAR99	HMC994LP5E
DC - 40	Wideband Power Amplifier	13	33.5	5	22	+10V @ 175 mA	Chip	3A001.b.2.d	HMC930 [1]
DC - 48	Wideband Power Amplifier	12	32	-	22	+10V @ 150 mA	Chip	3A001.b.2.f	HMC1022
0.2 - 22	Wideband Power Amplifier	13	38	3	27	+11V @ 365 mA	Chip	EAR99	HMC907
0.2 - 22	Wideband Power Amplifier	12	36	3.5	26	+10V @ 350 mA	LP5	EAR99	HMC907LP5E
2 - 20	Wideband Power Amplifier	16	30	4	26	+8V @ 290 mA	Chip	EAR99	HMC464
2 - 20	Wideband Power Amplifier	14	30	4	26	+8V @ 290 mA	LP5	EAR99	HMC464LP5E

[1] Amplifiers that benefit from Hittite Active Bias Controllers

AMPLIFIERS - Low Phase Noise

Frequency (GHz)	Function	Gain / NF (dB)	OIP3 (dBm)	10 kHz SSB Phase Noise (dBc/Hz)	P1dB / Psat (dBm)	Bias Supply	Package	ECCN Code	Part Number
2 - 18	Wideband, Low Phase Noise	14 / 4.5	27	-160	15 / 18	+5V @ 64 mA	Chip	EAR99	HMC606
2 - 18	Wideband, Low Phase Noise	13.5 / 5	27	-160	15 / 17	+5V @ 64 mA	LC5	EAR99	HMC606LC5

ATTENUATORS

Frequency (GHz)	Function	Insertion Loss (dB)	Attenuation Range (dB)	IIP3 (dBm)	Control Input (Vdc)	Package	ECCN Code	Part Number
Attenuators - Analog								
0.45 - 2.2	Analog VVA	1.9	0 to 48	20	0 to +3V	MS8	EAR99	HMC473MS8E
0.5 - 6.0	Analog VVA	2.5	0 to 26	35	0 to +5V	LP3	EAR99	HMC973LP3E
DC - 8	Analog VVA	1.5	0 to 32	10	0 to -3V	MS8G	EAR99	HMC346MS8GE
DC - 8	Analog VVA	2	0 to 30	10	0 to -3V	C8	EAR99	HMC346C8
DC - 8	Analog VVA	2	0 to 30	10	0 to -3V	G8 Hermetic	EAR99	HMC346G8
DC - 14	Analog VVA	2	0 to 30	10	0 to -3V	LP3	EAR99	HMC346LP3E
DC - 18	Analog VVA	1.5	0 to 30	10	0 to -3V	LC3B	EAR99	HMC346LC3B
DC - 20	Analog VVA	2.2	0 to 25	10	0 to -3V	Chip	EAR99	HMC346
5 - 26.5	Analog VVA	3.5	0 to 28	32	0 to -3V	LP3C	EAR99	HMC712LP3CE
5 - 30	Analog VVA	2.5	0 to 30	32	0 to -3V	Chip	EAR99	HMC712
5 - 30	Analog VVA	2	0 to 28	28	0 to -3V	LC4	EAR99	HMC812LC4
10 - 40	Analog VVA	3	0 to 35	33	0 to +3V	LP4K	EAR99	HMC985LP4KE
17 - 27	Analog VVA	1.5	0 to 22	17	-4 to +4V	Chip	5A991.h	HMC-VVD102
20 - 50	Analog VVA	3	0 to 35	33	0 to +3V	Chip	EAR99	HMC985
36 - 50	Analog VVA	1.5	0 to 22	17	0 to +4V	Chip	5A991.h	HMC-VVD106
70 - 86	Analog VVA	2	0 to 14	-	-5 to +5V	Chip	5A991.h	HMC-VVD104
Attenuators - Digital								
DC - 5	1-Bit Digital	1	10	50	TTL/CMOS	LP3	EAR99	HMC541LP3E
DC - 10	1-Bit Digital	2	10	54	0 / +3 to +5V	LP3	EAR99	HMC800LP3E
DC - 10	1-Bit Digital	1.5	15	53	0 / +3 to +5V	LP3	EAR99	HMC801LP3E
DC - 10	1-Bit Digital	2.5	20	53	0 / +3 to +5V	LP3	EAR99	HMC802LP3E
0.7 - 4.0	2-Bit Digital	0.5	2 to 6	52	0 / +3V	SOT26	EAR99	HMC290E
0.7 - 4.0	2-Bit Digital	0.9	4 to 12	54	0 / +3V	SOT26	EAR99	HMC291E
DC - 6	2-Bit Digital	0.5	2 to 6	50	TTL/CMOS	LP3	EAR99	HMC467LP3E
0.75 - 2.0	3-Bit Digital	1.8	4 to 28	45	0 / +3V	MS8	EAR99	HMC230MS8E
0.7 - 3.7	3-Bit Digital	1.3	2 to 14	51	0 / +3V	MS8	EAR99	HMC288MS8E
DC - 6	3-Bit Digital	0.7	1 to 7	50	TTL/CMOS	LP3	EAR99	HMC468LP3E
DC - 5.5	4-Bit Digital	0.8	1 to 15	50	TTL/CMOS	LP3	EAR99	HMC540LP3E
DC - 6	4-Bit Digital, Serial & Parallel Control	2.5	3 to 45	50	0 / +5V	LP4	EAR99	HMC629LP4E
0.1 - 30	5-Bit Digital	2.5	0.5 to 15.5	45	0 / +3 to +5V	Chip	EAR99	HMC941
0.1 - 30	5-Bit Digital, Serial Control	5	1 to 31	43	0 / +3 to +5V	LP4	EAR99	HMC1018LP4E
0.1 - 30	5-Bit Digital, Serial Control	4	0.5 to 15.5	45	0 / +3 to +5V	LP4	EAR99	HMC1019LP4E

SMT & Chip (Die) Products

ATTENUATORS

Frequency (GHz)	Function	Insertion Loss (dB)	Attenuation Range (dB)	IIP3 (dBm)	Control Input (Vdc)	Package	ECCN Code	Part Number
0.1 - 33	5-Bit Digital	5	1 to 31	43	0 / +3 to +5V	LP4	EAR99	HMC939LP4E
0.1 - 33	5-Bit Digital	4	0.5 to 15.5	45	0 / +3 to +5V	LP4	EAR99	HMC941LP4E
0.1 - 40	5-Bit Digital	3.5	1 to 31	43	0 / +3 to +5V	Chip	EAR99	HMC939
0.7 - 2.7	5-Bit Digital	2.3	1 to 31	54	0 / +3V	QS16	EAR99	HMC274QS16E
0.7 - 3.7	5-Bit Digital, Serial Control	2.1	1 to 31	48	Serial/CMOS	LP4	EAR99	HMC271ALP4E
0.7 - 3.8	5-Bit Digital	2.1	1 to 31	48	0 / +3V	MS10G	EAR99	HMC273MS10GE
0.7 - 3.8	5-Bit Digital, Serial Control	1.5	0.5 to 15.5	52	Serial/CMOS	LP4	EAR99	HMC305ALP4E
0.7 - 3.8	5-Bit Digital	1.5	0.5 to 15.5	52	0 / +3V	MS10	EAR99	HMC306MS10E
0.7 - 3.8	5-Bit Digital	1.3	0.5 to 15.5	48	0 / +3V	MS10	EAR99	HMC603MS10E
0.7 - 3.8	5-Bit Digital	1.3	0.5 to 15.5	48	0 / +3V	QS16	EAR99	HMC603QS16E
DC - 3	5-Bit Digital	2.0	1 to 31	44	0 / -5V	G16 Hermetic	EAR99	HMC335G16
DC - 3	5-Bit Digital	1.3	1 to 31	45	TTL/CMOS	LP3	EAR99	HMC470LP3E
DC - 4	5-Bit Digital	1.9	1 to 31	44	0 / -5V	QS16G	EAR99	HMC307QS16GE
DC - 4	5-Bit Digital	0.7	0.25 to 7.75	50	TTL/CMOS	LP3	EAR99	HMC539LP3E
DC - 3.8	6-Bit Digital	1.5	0.5 to 31.5	45	TTL/CMOS	LP4	EAR99	HMC472LP4E
DC - 3	6-Bit Digital	3.0	0.5 to 31.5	32	0 / -5V	G16 Hermetic	EAR99	HMC424G16
DC - 4	6-Bit Digital, Serial Control	1.2	0.5 to 31.5	45	Serial/CMOS	LP4	EAR99	HMC542ALP4E
DC - 6	6-Bit Digital, Serial & Parallel Control	1.8	0.5 to 31.5	55	0 / +5V	LP4	EAR99	HMC624LP4E
DC - 6	6-Bit Digital, Serial & Parallel Control	1.8	0.25 to 15.75	55	TTL/CMOS	LP4	EAR99	HMC792LP4E
DC - 13	6-Bit Digital	4.0	0.5 to 31.5	32	0 / -5V	Chip	EAR99	HMC424
DC - 13	6-Bit Digital	3.2	0.5 to 31.5	32	0 / -5V	LH5 Hermetic	EAR99	HMC424LH5
DC - 13	6-Bit Digital	4.0	0.5 to 31.5	32	0 / -5V	LP3	EAR99	HMC424LP3E
0.06 - 0.5	6-Bit Digital, Serial & Parallel Control	1.2	0.5 to 31.5	55	0 / +3 to +5V	LP4	EAR99	HMC624LFLP4E
2.4 - 8.0	6-Bit Digital	3.5	0.5 to 31.5	40	0 / +5V	Chip	EAR99	HMC425
2.2 - 8.0	6-Bit Digital	3.2	0.5 to 31.5	40	0 / +5V	LP3	EAR99	HMC425LP3E
0.01 - 0.3	7-Bit Digital	3.3	0.25 to 31.75	40	TTL/CMOS	LP3	EAR99	HMC759LP3E

AUTOMATIC GAIN CONTROL

Frequency (MHz)	Function	Gain Control Range (dB)	NF (dB)	OIP3 (dBm)	P1dB (dBm)	Bias Supply	Package	ECCN Code	Part Number
50 - 800	IF Automatic Gain Controller	-10 to +38	6	40	19	+5V @ 215 mA	LP5	EAR99	HMC992LP5E
700 - 3000	RF Automatic Gain Controller	-11 to +32	7.6	46	25	+5V @ 260 mA	LP5	EAR99	HMC993LP5E

DC POWER CONDITIONING - *Linear Voltage Regulators*

Input Voltage (V)	Function	Output Voltage (V)	Max. Output Current (mA)	Power Supply Rejection Ratio (PSRR) (dB)		Output Noise Spectral Density (nV/√Hz)		Regulated Outputs	Package	ECCN Code	Part Number
				1 kHz	1 MHz	1 kHz	10 kHz				
3.35 - 5.6	Quad High PSRR	2.5 - 5.2	240	80	60	7	3	4	LP3	EAR99	HMC860LP3E
3.35 - 5.6	Low Noise, High PSRR	1.8 - 5.2	500	80	60	7	3	4	LP3	EAR99	HMC1060LP3E
4.8 to 5.6	Low Noise, High PSRR	1.8 to 5.1	400	60	30	6	3	1	LP3	EAR99	HMC976LP3E

FILTERS - *Tunable*

Band Pass

Frequency Range (GHz)	Function	Return Loss (dB)	3 dB Bandwidth (%)	Low Side Rejection Frequency (Rej. >20 dB)	High Side Rejection Frequency (Rej. >20 dB)	Tuning Response (ns)	Package	ECCN Code	Part Number
1 - 2	Band Pass	10	11	0.8 x Fcenter	1.2 x Fcenter	< 200	LP5	EAR99	HMC890LP5E
2 - 3.9	Band Pass	10	9	0.9 x Fcenter	1.15 x Fcenter	< 200	LP5	EAR99	HMC891LP5E
4 - 7.7	Band Pass	15	9	0.9 x Fcenter	1.13 x Fcenter	< 200	LP5	EAR99	HMC892LP5E
4.8 - 9.5	Band Pass	7	6.5	0.9 x Fcenter	1.1 x Fcenter	< 200	LP5	EAR99	HMC893LP5E
5.9 - 11.2	Band Pass	7.5	6	0.92 x Fcenter	1.08 x Fcenter	< 200	LP5	EAR99	HMC894LP5E
6.8 - 12.6	Band Pass	12	10	0.88 x Fcenter	1.1 x Fcenter	< 200	LP4	EAR99	HMC895LP4E
9 - 19	Band Pass	9.5	18	0.81 x Fcenter	1.17 x Fcenter	< 200	Chip	EAR99	HMC897
9 - 19	Band Pass	9.5	18	0.81 x Fcenter	1.17 x Fcenter	< 200	LP4	EAR99	HMC897LP4E
10 - 18	Band Pass	11	9	0.89 x Fcenter	1.1 x Fcenter	< 200	LP4	EAR99	HMC896LP4E
11.5 - 21.5	Band Pass	9	17	0.81 x Fcenter	1.16 x Fcenter	< 200	LP4	EAR99	HMC898LP4E
18.5 - 37.0	Band Pass	10	18	0.81 x Fcenter	1.20 x Fcenter	< 200	LP4	EAR99	HMC899LP4E
19 - 38	Band Pass	10	18	0.81 x Fcenter	1.20 x Fcenter	< 100	Chip	EAR99	HMC899

Low Pass

Frequency Range (GHz)	Function	Return Loss (dB)	Cutoff Frequency Range (GHz)	Stopband Frequency (Rej. >20 dB)	Tuning Response (ns)	Package	ECCN Code	Part Number
DC - 4.0	Low Pass	10	2.2 - 4.0	1.25 x Fcutoff	150	LP5	EAR99	HMC881LP5E
DC - 7.6	Low Pass	10	4.5 - 7.6	1.23 x Fcutoff	150	LP5	EAR99	HMC882LP5E

Band Reject

Frequency Range (GHz)	Function	Rejection Band Tuning Freq. (GHz)	Pass Band Insertion Loss (dB)	Stop Band Rejection (dB)	20 dB Bandwidth (%)	Tuning Response (ns)	Package	ECCN Code	Part Number
0.1 - 25	Band Reject	3.6 - 12.2	3	25	8	200	LP5	EAR99	HMC1000LP5E

Programmable Harmonic

Frequency Range (GHz)	Function	Return Loss (dB)	3 dB Bandwidth (GHz)	Stopband Frequency (Rej. >10 dB)	Tuning Response (ns)	Package	ECCN Code	Part Number
0.25 - 3.025	Programmable Harmonic Low Pass Filter	10	1 - 3	1.2 Fcutoff	10	LP3	EAR99	HMC1044LP3E

IF / BASEBAND PROCESSING - Dual Baseband Low Pass Filter & Dual Baseband Digital VGA

Dual Baseband Low Pass Filter

3 dB Bandwidth Setting (MHz)	Function	3 dB Bandwidth Accuracy (%)	Gain (dB)	NF (dB)	OIP3 (dBm)	Package	ECCN Code	Part Number
3.5 - 50	Dual Low Pass with ADC Driver	± 2.5	0 / 10	12	30	LP5	EAR99	HMC900LP5E
5 - 72	Dual Low Pass with ADC Driver	± 2.5	0 / 10	10	30	LP5	EAR99	HMC1023LP5E

Please Note: 400 Ohm Reference Impedance Are Shown

Dual Baseband Digital VGA

Frequency (MHz)	Function	NF (dB)	Variable Gain (dB)	OIP3 (dBm)	OIP2 (dBm)	Sideband Supp. (dB)	Magnitude (dB) / Phase (deg) Balance	Bias Supply	Package	ECCN Code	Part Number
DC - 100	Digital, Serial & Parallel Control	6	0 to 40	+30	+65	55	±0.1 / ±1	+5V @ 70 mA	LP4	EAR99	HMC960LP4E

Please Note: 100 Ohm Reference Impedance Are Shown

I/Q MIXERS / IRMs

RF Frequency (GHz)	Function	IF Frequency (GHz)	Conversion Gain (dB)	Image Rejection (dB)	IIP3 (dBm)	Package	ECCN Code	Part Number
3 - 7	I/Q Mixer / IRM	DC - 3.5	-7.5	33	23	Chip	EAR99	HMC620
3 - 7	I/Q Mixer / IRM	DC - 3.5	-7.5	32	22	LC4	EAR99	HMC620LC4
4 - 8.5	I/Q Mixer / IRM	DC - 3.5	-7.5	40	23	Chip	EAR99	HMC525
4 - 8.5	I/Q Mixer / IRM	DC - 3.5	-7.5	40	23	LC4	EAR99	HMC525LC4
5.9 - 12.0	I/Q Mixer / IRM	DC - 1.5	-8	30	18	Chip	EAR99	HMC256
6 - 10	I/Q Mixer / IRM	DC - 3.5	-7	40	22	Chip	EAR99	HMC520
6 - 10	I/Q Mixer / IRM	DC - 3.5	-7	40	23	LC4	EAR99	HMC520LC4
6 - 10	I/Q Mixer / IRM	DC - 3.5	-7.5	40	28	Chip	EAR99	HMC526
6 - 10	I/Q Mixer / IRM	DC - 3.5	-7.5	40	28	LC4	EAR99	HMC526LC4
8 - 12	I/Q Mixer / IRM	DC - 4	-8	25	18	LC4B	EAR99	HMC1056LP4BE
8.5 - 13.5	I/Q Mixer / IRM	DC - 3.5	-7.5	40	24	Chip	EAR99	HMC521
8.5 - 13.5	I/Q Mixer / IRM	DC - 3.5	-7.5	38	24	LC4	EAR99	HMC521LC4
8.5 - 13.5	I/Q Mixer / IRM	DC - 2	-7.5	35	28	Chip	EAR99	HMC527
8.5 - 13.5	I/Q Mixer / IRM	DC - 2	-7.5	34	28	LC4	EAR99	HMC527LC4
10 - 16	I/Q Mixer / IRM	DC - 3.5	-8	25	25	LC5	EAR99	HMC775LC5
11 - 16	I/Q Mixer / IRM	DC - 3.5	-7.5	35	24	Chip	EAR99	HMC522
11 - 16	I/Q Mixer / IRM	DC - 3.5	-7.5	35	24	LC4	EAR99	HMC522LC4
11 - 16	I/Q Mixer / IRM	DC - 3.5	-8	35	27	Chip	EAR99	HMC528
11 - 16	I/Q Mixer / IRM	DC - 3.5	-8	35	26	LC4	EAR99	HMC528LC4
15 - 23	I/Q Mixer / IRM	DC - 3.5	-8	25	25	LC4	EAR99	HMC523LC4
15 - 23.6	I/Q Mixer / IRM	DC - 3.5	-8	27	25	Chip	EAR99	HMC523
15 - 33.5	I/Q Mixer / IRM	DC - 3.5	-10	40	22	LC4	EAR99	HMC1042LC4
17 - 27	I/Q Mixer / IRM	DC - 3.5	-9	36	20	LC4	EAR99	HMC1041LC4
19 - 33	I/Q Mixer / IRM	DC - 5	-8	25	17	Chip	5A991.h	HMC-MDB172
22 - 32	I/Q Mixer / IRM	DC - 3.5	-10	23	20	Chip	EAR99	HMC524
22 - 32	I/Q Mixer / IRM	DC - 4.5	-10	20	20	LC3B	EAR99	HMC524LC3B
24 - 28	I/Q Mixer / IRM	DC - 3	-9.5	21	17	LP3	EAR99	HMC1063LP3E
31 - 38	I/Q Mixer / IRM	DC - 3.5	-10.5	17	21	Chip	EAR99	HMC555
35 - 45	I/Q Mixer / IRM	DC - 5	-8	25	17	Chip	5A991.h	HMC-MDB171
36 - 41	I/Q Mixer / IRM	DC - 3.5	-11	18	23	Chip	EAR99	HMC556
55 - 64	I/Q Mixer / IRM	DC - 3	-9	30	16	Chip	5A991.h	HMC-MDB207

SMT & Chip (Die) Products

I/Q MIXERS / IRMs

RF Frequency (GHz)	Function	IF Frequency (GHz)	Conversion Gain (dB)	Image Rejection (dB)	IIP3 (dBm)	Package	ECCN Code	Part Number
26 - 33 RF	Sub-Harmonic, I/Q Mixer / IRM	DC - 3	-11	22	16	Chip	EAR99	HMC404
54 - 64 RF	Sub-Harmonic, I/Q Mixer / IRM	DC - 3	-12.5	30	7	Chip	5A991.h	HMC-MDB218
71 - 86	Sub-Harmonic , I/Q Mixer / IRM	DC - 12	-12	-	13	Chip	EAR99	HMC1057

I/Q DOWNCONVERTER / RECEIVERS

RF Frequency (GHz)	Function	IF Frequency (GHz)	Conversion Gain (dB)	Noise Figure (dB)	Image Rejection (dB)	IIP3 (dBm)	Package	ECCN Code	Part Number
5.6 - 8.6	I/Q Downconverter / Receiver	DC - 3	12	2.2	20	2	LP4	EAR99	HMC951LP4E
7 - 9	I/Q Downconverter / Receiver	DC - 3.5	10	2.5	35	1.5	LC5	EAR99	HMC567LC5
9 - 12	I/Q Downconverter / Receiver	DC - 3.5	11	2.2	25	2	LC5	EAR99	HMC908LC5
12 - 16	I/Q Downconverter / Receiver	DC - 3.5	14	2.8	32	-1	LC5	EAR99	HMC869LC5
17 - 20	I/Q Downconverter / Receiver	DC - 3.5	14	2.5	40	0	LP4	EAR99	HMC966LP4E
17 - 21	I/Q Downconverter / Receiver	DC - 3.5	10	3	17	3	Chip	EAR99	HMC570
17 - 21	I/Q Downconverter / Receiver	DC - 3.5	10	3	18	2	LC5	EAR99	HMC570LC5
17 - 24	I/Q Downconverter / Receiver	DC - 3.3	11	2.2	21	2	LC5	EAR99	HMC904LC5
17 - 24	I/Q Downconverter / Receiver	DC - 3.5	15	2.5	25	1	LP4	EAR99	HMC967LP4E
20 - 28	I/Q Downconverter / Receiver	DC - 3.5	14	2.5	21	1	LP4	EAR99	HMC977LP4E
21 - 25	I/Q Downconverter / Receiver	DC - 3.5	11	3	24	5	Chip	EAR99	HMC571
21 - 25	I/Q Downconverter / Receiver	DC - 3.5	10	2	20	5	LC5	EAR99	HMC571LC5
24 - 28	I/Q Downconverter / Receiver	DC - 3.5	8	3.5	20	5	Chip	EAR99	HMC572
24 - 28	I/Q Downconverter / Receiver	DC - 3.5	8	3.5	18	5	LC5	EAR99	HMC572LC5
NEW! 27 - 34	I/Q Downconverter / Receiver	DC - 4	12	3.5	17	2	LP4	EAR99	HMC1065LP4E
37 - 44	I/Q Downconverter / Receiver	DC - 4	13	3.5	25	2	LC5A	EAR99	HMC6147ALC5A

I/Q UPCONVERTER / TRANSMITTERS

RF Frequency (GHz)	Function	IF Frequency (GHz)	Conversion Gain (dB)	Sideband Rejection (dBc)	OIP3 (dBm)	Package	ECCN Code	Part Number
5.5 - 8.6	I/Q Upconverter / Transmitter w/ VGA	DC - 3	16.5	-30	29	LC5	EAR99	HMC925LC5
10 - 16	I/Q Upconverter / Transmitter w/ VGA	DC - 3	17	-30	14	LC5	EAR99	HMC924LC5
11 - 17	I/Q Upconverter / Transmitter	DC - 2	13	-20	26	LC5	EAR99	HMC709LC5
16 - 21	I/Q Upconverter / Transmitter	DC - 3.5	12	-20	30	LC5	EAR99	HMC710LC5
17.7 - 23.6	I/Q Upconverter / Transmitter	DC - 3.5	15	-35	35	LC5	EAR99	HMC819LC5
21 - 27	I/Q Upconverter / Transmitter	DC - 3.75	12	-20	27	LC5	EAR99	HMC815LC5
37 - 40	I/Q Upconverter / Transmitter w/ VGA	DC - 4	10	17	27	LC5A	EAR99	HMC6787ALC5A
40 - 44	I/Q Upconverter / Transmitter w/ VGA	DC - 4	12	25	27	LC5A	EAR99	HMC6146BLC5A

MIXERS

RF Frequency (GHz)	Function	IF Frequency (GHz)	Conversion Gain (dB)	LO / RF Isolation (dB)	IIP3 (dBm)	Package	ECCN Code	Part Number
High IP3 Mixers								
0.4 - 0.65	High IP3, 0 LO	DC - 0.25	-9	7	33	MS8G	EAR99	HMC585MS8GE
0.45 - 0.5	High IP3, SGL-END	DC - 0.15	-9.5	20	32	MS8	EAR99	HMC387MS8E
0.5 - 2.7	High IP3, DBL-BAL, +2 LO	DC - 1	-8	28	28	LP4	EAR99	HMC915LP4E
0.7 - 1.0	High IP3, SGL-END	DC - 0.25	-8.5	24	35	MS8	EAR99	HMC399MS8E
0.7 - 1.0	High IP3, DBL-BAL, 0 LO	DC - 0.45	-7	23	32	LP4	EAR99	HMC684LP4E
0.7 - 1.1	High IP3, DBL-BAL, 0 LO	0.05 - 0.25	-7.5	24	40	LP4	EAR99	HMC786LP4
0.7 - 1.2	High IP3, DBL-BAL	DC - 0.3	-9	42	25	S8	EAR99	HMC351S8E
0.7 - 1.5	High IP3, 0 LO	DC - 0.35	-9	20	33	MS8G	EAR99	HMC483MS8GE
0.7 - 1.5	High IP3, DBL-BAL, 0 LO	DC - 0.5	-7.5	24	34	LP4	EAR99	HMC686LP4E
0.8 - 1.2	High IP3, DBL-BAL, 0 LO	DC - 0.3	-8	27	27	LP4	EAR99	HMC551LP4E
1.5 - 3.5	High IP3, DBL-BAL	DC - 1	-8	38	25	MS8	EAR99	HMC316MS8E
1.6 - 3.0	High IP3, DBL-BAL, 0 LO	DC - 1	-8	30	25	LP4	EAR99	HMC552LP4E
1.7 - 2.2	High IP3, SGL-END	DC - 0.3	-8.8	30	36	MS8	EAR99	HMC400MS8E
1.7 - 2.2	High IP3, DBL-BAL, 0 LO	DC - 0.5	-8	30	35	LP4	EAR99	HMC685LP4E
1.7 - 2.2	High IP3, DBL-BAL, 0 LO	DC - 0.5	-8	31	34	LP4	EAR99	HMC687LP4E
1.7 - 2.2	High IP3, DBL-BAL, 0 LO	0.05 - 0.30	-8	30	38	LP4	EAR99	HMC785LP4E
1.7 - 2.4	High IP3, SGL-END	0.05 - 0.3	-9.2	10	34	MS8G	EAR99	HMC485MS8GE
1.7 - 3.0	High IP3, SGL-BAL	DC - 0.8	-9	30	30	MS8	EAR99	HMC304MS8E
1.7 - 4.0	High IP3, DBL-BAL, +4 LO	DC - 1.0	-8	32	25	LP4	EAR99	HMC215LP4E
1.8 - 2.2	High IP3, SGL-END	DC - 0.5	-8.5	25	31	MS8	EAR99	HMC402MS8E
2.0 - 2.7	High IP3, DBL-BAL, 0 LO	DC - 0.45	-7.5	25	31	LP4	EAR99	HMC688LP4E
2.0 - 2.7	High IP3, DBL-BAL, 0 LO	DC - 0.45	-7.5	26	31	LP4	EAR99	HMC689LP4E
2.3 - 4.0	High IP3, +4 LO	DC - 1	-10	15	35	LP4	EAR99	HMC615LP4E
2.4 - 4.0	High IP3, SGL-END	DC - 1	-10	30	34	MS8	EAR99	HMC214MS8E
3.1 - 3.9	High IP3, DBL-BAL, 0 LO	DC - 0.6	-8.5	28	30	LP4	EAR99	HMC666LP4E

MIXERS

RF Frequency (GHz)	Function	IF Frequency (GHz)	Conversion Gain (dB)	LO / RF Isolation (dB)	IIP3 (dBm)	Package	ECCN Code	Part Number
6 - 12	High IP3, DBL-BAL	DC - 4	-8	40	30	LC3	EAR99	HMC663LC3
9 - 15	High IP3, DBL-BAL	DC - 2.5	-7.5	40	24	MS8G	EAR99	HMC410AMS8GE
Downconverter RFICs								
0.7 - 3.5	High IP3 Dual Downconverter	0.05 - 0.35	7	55	+25	LP4	EAR99	HMC990LP4E
0.7 - 3.5	High IP3 Downconverter	0.05-0.35	7	58	25	LP3	EAR99	HMC1090LP3E
0.7 - 1.0	Downconverter	0.05 - 0.25	12.5	25	15	QS16	EAR99	HMC420QS16E
0.7 - 1.0	High IP3, Dual Downconverter	0.06 - 0.5	7.5	16	23	LP6C	EAR99	HMC683LP6CE
0.8 - 0.96	High IP3 Dual Downconverter	0.05 - 0.3	9	4	26	LP6	EAR99	HMC581LP6E
0.8 - 1.0	High IP3 Downconverter	0.05 - 0.25	13.8	28	15	QS16G	EAR99	HMC377QS16GE
0.8 - 2.7	Hi-IP3 Wideband Downconverter	0.001 - 0.6	-1	48	26	LP4	EAR99	HMC334LP4E
0.9 - 1.6	Hi-IP3 Downconverter with RF Amplifier	0.05 - 0.5	30	45	6	LP4	EAR99	HMC621LP4E
1.4 - 2.3	High IP3 Downconverter	0.05 - 0.3	9	33	19	QS16G	EAR99	HMC421QS16E
1.7 - 2.2	High IP3 Downconverter	0.05 - 0.3	11	25	19	QS16G	EAR99	HMC380QS16GE
1.7 - 2.2	High IP3, Dual Downconverter	50 - 300	9	10	27	LP6	EAR99	HMC381LP6E
1.7 - 2.2	High IP3, Dual Downconverter	0.06 - 0.4	6	25	25	LP6C	EAR99	HMC682LP6CE
1.8 - 2.7	High IP3 Downconverter with RF Amplifier	0.05 - 0.65	33	45	11	LP4	EAR99	HMC623LP4E
0 to +7 dBm LO Double & Single Balanced Mixers								
0.6 - 1.3	Low LO, DBL-BAL	DC - 0.4	-8	35	15	MS8	EAR99	HMC423MS8E
0.7 - 1.2	0 LO, DBL-BAL	0.25 - 0.45	10	36	23	LP4	EAR99	HMC665LP4E
1.2 - 2.6	Low LO, DBL-BAL	DC - 1	-8	30	15	MS8	EAR99	HMC422MS8E
1.8 - 3.9	+3 LO, DBL-BAL	0.2 - 0.55	9	33	23	LP4	EAR99	HMC622LP4E
3 - 3.8	Low LO, SGL-BAL	DC - 1	-8.5	15	10	SOT26	EAR99	HMC333E
4 - 7	0 LO, DBL-BAL	DC - 2.5	-7	32	15	MS8G	EAR99	HMC488MS8GE
+10 to +12 dBm LO Double & Single Balanced Mixers								
0.7 - 2.0	+10 LO, DBL-BAL	DC - 0.3	-9	45	17	S8	EAR99	HMC207AS8E
0.7 - 2.0	+10 LO, DBL-BAL	DC - 0.5	-9	24	17	MS8	EAR99	HMC208AMS8E
1.5 - 4.5	+10 LO, DBL-BAL	DC - 1.5	-8.5	40	19	MS8	EAR99	HMC213AMS8E
1.7 - 3.0	+10 LO, SGL-BAL	DC - 0.8	-9	30	21	MS8	EAR99	HMC272AMS8E
4.5 - 8.0	+10 LO, DBL-BAL	DC - 2	-8.2	35	16	C8	EAR99	HMC168C8
5 - 12	+10 LO, DBL-BAL	DC - 4	-7.5	25	17	MS8	EAR99	HMC220AMS8E
7 - 10	+10 LO, DBL-BAL	DC - 2	-9	32	16	C8	EAR99	HMC171C8
NEW! 50 - 75	+10 LO, DBL-BAL	DC - 26	-7.5	30	16	Chip	EAR99	HMC1081
+13 to +14 dBm LO Double & Triple Balanced Mixers								
0.7 - 1.2	+13 LO, SGL-BAL	DC - 0.3	-9	26	21	MS8	EAR99	HMC277MS8E
1.7 - 4.5	+13 LO, DBL-BAL	DC - 1	-8	30	20	MS8	EAR99	HMC175MS8E
1.7 - 4.5	+13 LO, Dual Channel	DC - 1.5	-8	-	23	LP5	EAR99	HMC340ALP5E
2 - 18	Double Balance Mixer	DC - 4	-10	35	19	LC3B	EAR99	HMC1048LC3B
2.5 - 4.0	+13 LO, DBL-BAL	DC - 2	-9	45	18	C8	EAR99	HMC170C8
4.5 - 9.0	+13 LO, DBL-BAL	DC - 2.5	-8.5	25	21	MS8	EAR99	HMC219AMS8E
6 - 26	+13 LO, DBL-BAL	DC - 10	-9	32	20	Chip	EAR99	HMC773
6 - 26	+13 LO, DBL-BAL	DC - 8	-9	38	22	LC3B	EAR99	HMC773LC3B
7 - 14	+13 LO, DBL-BAL	DC - 5	-7	48	22	Chip	EAR99	HMC553
7 - 14	+13 LO, DBL-BAL	DC - 5	-7	50	22	LC3B	EAR99	HMC553LC3B
7 - 34	+13 LO, DBL-BAL	DC - 8	-11	35	22	LC3B	EAR99	HMC774LC3B
7 - 43	+13 LO, DBL-BAL	DC - 10	-9	35	22	Chip	EAR99	HMC774
9 - 15	+13 LO, DBL-BAL	DC - 2.5	-7.5	40 - 50	17	MS8G	EAR99	HMC412AMS8GE
10 - 15	+13 LO, SGL-BAL	DC - 3	-9	27	16	MS8G	EAR99	HMC411MS8GE
11 - 20	+13 LO, DBL-BAL	DC - 6	-7	46	18	Chip	EAR99	HMC554
11 - 20	+13 LO, DBL-BAL	DC - 6	-7	46	18	LC3B	EAR99	HMC554LC3B
14 - 26	+13 LO, DBL-BAL	DC - 8	-7.5	39	20	Chip	EAR99	HMC260
14 - 26	+13 LO, DBL-BAL	DC - 8	-7.5	38	20	LC3B	EAR99	HMC260LC3B
16 - 30	+13 LO, DBL-BAL	DC - 8	-8	40	21	LC3B	EAR99	HMC292LC3B
17 - 31	+13 LO, DBL-BAL	DC - 6	-8	32	19	LM3C	EAR99	HMC292LM3C
18 - 32	+13 LO, DBL-BAL	DC - 8	-7.5	38	19	Chip	EAR99	HMC292
24 - 32	+13 LO, DBL-BAL	DC - 8	-10	38	19	LC3B	EAR99	HMC329LC3B
24 - 40	+13 LO, DBL-BAL	DC - 18	-8	35	21	Chip	EAR99	HMC560
24 - 40	+13 LO, DBL-BAL	DC - 17	-10	35	21	LM3	EAR99	HMC560LM3
25 - 40	+13 LO, DBL-BAL	DC - 8	-9.5	42	19	Chip	EAR99	HMC329
26 - 32	+13 LO, TPL-BAL	16 - 22	-10	45	22	Chip	EAR99	HMC1015
26 - 32	+13 LO, TPL-BAL	16 - 22	-10	45	23	LC3	EAR99	HMC1043LC3
26 - 40	+13 LO, DBL-BAL	DC - 8	-8	37	19	LM3	EAR99	HMC329LM3
54 - 64	+13 LO, DBL-BAL	DC - 5	-8	30	13	Chip	5A991.h	HMC-MDB169
70 - 90	+14 LO, DBL-BAL	DC - 18	-12	-	-	Chip	5A991.h	HMC-MDB277

SMT & Chip (Die) Products

MIXERS

RF Frequency (GHz)	Function	IF Frequency (GHz)	Conversion Gain (dB)	LO / RF Isolation (dB)	IIP3 (dBm)	Package	ECCN Code	Part Number
+15 to +20 dBm LO Single, & Double Balanced Mixers								
1.8 - 5.0	+15 LO, DBL-BAL	DC - 3	-7	42	18	Chip	EAR99	HMC128
1.8 - 5.0	+15 LO, DBL-BAL	DC - 2	-10	40	18	G8 Hermetic	EAR99	HMC128G8
2.5 - 7	+15 LO, DBL-BAL	DC - 3	-7	48	22	Chip	EAR99	HMC557
2.5 - 7	+15 LO, DBL-BAL	DC - 3	-7	48	22	LC4	EAR99	HMC557LC4
4 - 8	+15 LO, DBL-BAL	DC - 3	-7	40	17	Chip	EAR99	HMC129
4 - 8	+15 LO, DBL-BAL	DC - 3	-8	30	18	G8 Hermetic	EAR99	HMC129G8
4 - 8	+15 LO, DBL-BAL	DC - 3	-7	40	17	LC4	EAR99	HMC129LC4
5.5 - 14	+15 LO, DBL-BAL	DC - 6	-7	45	24	Chip	EAR99	HMC558
5.5 - 14	+15 LO, DBL-BAL	DC - 6	-7	45	24	LC3B	EAR99	HMC558LC3B
6 - 11	+15 LO, DBL-BAL	DC - 2	-7	40	17	Chip	EAR99	HMC130
6 - 15	+15 LO, DBL-BAL	DC - 2	-8.5	35	20	C8	EAR99	HMC141C8 / 142C8
6 - 18	+15 LO, DBL-BAL	DC - 6	-10	25	21	Chip	EAR99	HMC141 / 142
7 - 14	+15 LO, DBL-BAL	DC - 2	-10	35	20	LH5 Hermetic	EAR99	HMC141LH5
14 - 23	+15 LO, DBL-BAL	DC - 2	-10.5	38	18	Chip	EAR99	HMC203
3 - 10	+17 LO, DBL-BAL	DC - 4	-9	55	23	LC3B	EAR99	HMC787LC3B
5 - 20	+20 LO, DBL-BAL	DC - 3	-10	30	25	Chip	EAR99	HMC143 / 144
6 - 20	+20 LO, DBL-BAL	DC - 3	-10	35	23	LC4	EAR99	HMC144LC4
6 - 20	+20 LO, DBL-BAL	DC - 3	-10	35	24	LH5 Hermetic	EAR99	HMC144LH5
Sub-Harmonic Mixers								
14 - 20	Sub-Harmonic	DC - 3	-10	40	7	LM3	EAR99	HMC258LM3
14 - 21	Sub-Harmonic	DC - 3	-10	40	7	Chip	EAR99	HMC258
14.5 - 19.5	Sub-Harmonic	DC - 3.5	-10	45	5	LC3B	EAR99	HMC258LC3B
17 - 25	Sub-Harmonic	DC - 3	-9	27	10	Chip	EAR99	HMC337
17.7 - 23.6	Sub-Harmonic, Upconverter	DC - 3.5	15	40	13	LC5	EAR99	HMC711LC5
20 - 30	Sub-Harmonic	DC - 4	-9	30	10	LM3	EAR99	HMC264LM3
20 - 31	Sub-Harmonic, Downconverter	0.7 - 3.0	3	28	8	LM3	EAR99	HMC265LM3
20 - 32	Sub-Harmonic	DC - 6	-10	40	13	Chip	EAR99	HMC264
20 - 32	Sub-Harmonic, Downconverter	0.7 - 3.0	3	30	10	Chip	EAR99	HMC265
20 - 40	Sub-Harmonic	1 - 3	-12	24	13	Chip	EAR99	HMC266
21 - 31	Sub-Harmonic	DC - 6	-9	40	13	LC3B	EAR99	HMC264LC3B
24 - 34	Sub-Harmonic	DC - 3	-11	33	13	LC3B	5A991.b	HMC338LC3B
24 - 34	Sub-Harmonic	DC - 4	-10	30	22	LC4	EAR99	HMC798LC4
26 - 33	Sub-Harmonic	DC - 2.5	-9	33	11	Chip	5A991.b	HMC338
33 - 42	Sub-Harmonic	DC - 3	-10	37	10	Chip	EAR99	HMC339
NEW! 71 - 86	Sub-Harmonic	DC - 12	-11	28	6	Chip	EAR99	HMC1058

DEMODULATORS - *I/Q Demodulator*

Input Frequency (GHz)	Function	IF Frequency (GHz)	Conversion Gain (dB)	Noise Figure (dB)	IIP3 / IIP2 (dBm)	Package	ECCN Code	Part Number
0.1 - 4.0	I/Q Demodulator	DC - 0.6	-3.5	15	+25 / +60	LP4	EAR99	HMC597LP4E

MODULATORS - *Bi-Phase Modulator*

Input Frequency (GHz)	Function	Loss (dB)	Amp / Phase Balance (dB/Deg)	Carrier Suppression (dBc)	Bias Control (mA)	Package	ECCN Code	Part Number
1.8 - 5.2	Bi-Phase	8	0.2 / 2.5	30	+ / - 5	Chip	EAR99	HMC135
4 - 8	Bi-Phase	8	0.1 / 4.0	30	+ / - 5	Chip	EAR99	HMC136
6 - 11	Bi-Phase	9	0.25 / 10.0	20	+ / - 5	Chip	EAR99	HMC137

MODULATORS - *Direct Quadrature Modulator*

Input Freq. (GHz)	Function	OIP3 (dBm) / Carrier Suppression (dBc)	Modulation Bandwidth (MHz)	Output Noise Floor (dBc/Hz)	Bias Supply	Package	ECCN Code	Part Number
0.02 - 2.7	Direct Quadrature	23 / 42	DC - 700	-162	+5V @ 160 mA	LP4	EAR99	HMC696LP4E
0.05 - 2.8	Direct Quadrature with VGA	25 / 50	DC - 440	-159	+5V @ 120 mA	LP5	3A001.a.11.b	HMC795LP5E
0.1 - 4.0	Direct Quadrature	23 / 42	DC - 700	-159	+5V @ 170 mA	LP4	EAR99	HMC497LP4E
0.1 - 6.0	Direct Quadrature	30 / 40	DC - 700	-160	+5V @170 mA	LP4	EAR99	HMC1097LP4E
0.25 - 3.8	Direct Quadrature	14 / 38	DC - 250	-158	+3.3V @ 108 mA	LP3	EAR99	HMC495LP3E
0.45 - 4.0	Direct Quadrature	22 / 43	DC - 700	-165	+5V @ 168 mA	LP4	EAR99	HMC697LP4E
4 - 7	Direct Quadrature	17 / 34	DC - 250	-157	+3V @ 93 mA	LP3	EAR99	HMC496LP3E

MODULATORS - *Vector Modulators*

Frequency (GHz)	Function	Gain Range (dB)	Continuous Phase Control (deg)	IP3 / Noise Floor (Ratio)	IIP3 @ Max. Gain (dBm)	Package	ECCN Code	Part Number
0.7 - 1.0	Vector	-50 to -10	360	186.5	34	LP3	EAR99	HMC630LP3E

MODULATORS - Vector Modulators

Frequency (GHz)	Function	Gain Range (dB)	Continuous Phase Control (deg)	IP3 / Noise Floor (Ratio)	IIP3 @ Max. Gain (dBm)	Package	ECCN Code	Part Number
1.8 - 2.7	Vector	-50 to -10	360	186	35	LP3	EAR99	HMC631LP3E
1.8 - 2.2	Vector	-50 to -10	360	185	33	LP3	EAR99	HMC500LP3E

PASSIVES - Fixed Attenuators

Frequency (GHz)	Function	Attenuation Accuracy (dB)	Nominal Attenuation (dB)	Maximum Input Power (dBm)	Chip Size (Mils)	Package	ECCN Code	Part Number
DC - 50	Thru Line	±0.2	0.15	-	17 x 18	Chip	EAR99	HMC650
DC - 50	Thru Line	±0.3	0.15	-	23 x 18	Chip	EAR99	HMC651
DC - 50	Passive	±0.2	2	27	17 x 18	Chip	EAR99	HMC652
DC - 25	Passive	±0.5	2	27	-	LP2	EAR99	HMC652LP2E
DC - 50	Passive	±0.2	3	26	17 x 18	Chip	EAR99	HMC653
DC - 25	Passive	±0.5	3	26	-	LP2	EAR99	HMC653LP2E
DC - 50	Passive	±0.2	4	25	17 x 18	Chip	EAR99	HMC654
DC - 25	Passive	±0.5	4	25	-	LP2	EAR99	HMC654LP2E
DC - 50	Passive	±0.2	6	26	17 x 18	Chip	EAR99	HMC655
DC - 25	Passive	±0.5	6	26	-	LP2	EAR99	HMC655LP2E
DC - 50	Passive	±0.1	10	25	17 x 18	Chip	EAR99	HMC656
DC - 25	Passive	±1.5	10	25	N/A	LP2	EAR99	HMC656LP2E
DC - 50	Passive	±0.4	15	25	17 x 18	Chip	EAR99	HMC657
DC - 25	Passive	±2	15	25	N/A	LP2	EAR99	HMC657LP2E
DC - 50	Passive	±0.5	20	25	23 x 18	Chip	EAR99	HMC658
DC - 25	Passive	±2	20	25	N/A	LP2	EAR99	HMC658LP2E

PHASE SHIFTERS - Analog

Frequency (GHz)	Function	Insertion Loss (dB)	Phase Range (deg)	2nd Harmonic Pin = -10 dBm (dBc)	Control Voltage Range (Vdc)	Package	ECCN Code	Part Number
1 - 2	Analog	3.5	400°	-40	0 to +13V	LP5	EAR99	HMC934LP5E
2 - 4	Analog	3.5	480° @ 2 GHz 450° @ 4 GHz	-40	0V to +13V	LP5	EAR99	HMC928LP5E
2 - 20	Analog	4	270° @ 2 GHz 180° @ 20 GHz	-45	0.5 to +11V	LP5	EAR99	HMC935LP5E
4 - 8	Analog	4	450° @ 4 GHz 430° @ 8 GHz	-40	0V to +13V	LP4	EAR99	HMC929LP4E
5 - 18	Analog	4	500° @ 5 GHz 100° @ 18 GHz	-80	0V to +10V	Chip	EAR99	HMC247
6 - 15	Analog	7	750° @ 6 GHz 500° @ 15 GHz	-40	0V to +5V	LP4	EAR99	HMC538LP4E
8 - 12	Analog	3.5	425° @ 8 GHz 405° @ 12 GHz	-35	0 to +13V	LP4	EAR99	HMC931LP4E
8 - 23	Analog	-	500°	-35	2.7 to 3.9V	LC3	3A001.a.11.b	HMC877LC3
12 - 18	Analog	4	405° @ 12 GHz 385° @ 18 GHz	-40	0 to +13V	LP4	EAR99	HMC932LP4E
18 - 24	Analog	4.5	495° @ 18 GHz 460° @ 24 GHz	-37	0 to +13V	LP4	EAR99	HMC933LP4E

PHASE SHIFTERS - Digital

Frequency (GHz)	Function	Insertion Loss (dB)	Phase Range (deg)	IIP3 (dBm)	Control Input (Vdc)	Package	ECCN Code	Part Number
8 - 12	4-Bit Digital	5	22.5 to 360	40	0 / -3V	Chip	EAR99	HMC543
8 - 12	4-Bit Digital	6.5	22.5 to 360	37	0 / -3V	LC4B	EAR99	HMC543LC4B
15 - 18.5	5-Bit Digital	7	11.25 to 360	40	0 / -3	Chip	EAR99	HMC644
15 - 18.5	5-Bit Digital	7	11.25 to 360	40	0 / -3	LC5	EAR99	HMC644LC5
1.2 - 1.4	6-Bit Digital	4	5.625 to 360	45	0 / +5V	LP6	EAR99	HMC936LP6E
2.5 - 3.1	6-Bit Digital	4	5.625 to 360	54	0 / +5	Chip	EAR99	HMC647
2.5 - 3.1	6-Bit Digital	4	5.625 to 360	54	0 / +5	LP6	EAR99	HMC647LP6E
2.9 - 3.9	6-Bit Digital	4	5.625 to 360	45	0 / +5	Chip	EAR99	HMC648
2.9 - 3.9	6-Bit Digital	5	5.625 to 360	45	0 / +5	LP6	EAR99	HMC648LP6E
3 - 6	6-Bit Digital	6.5	5.625 to 360	44	0 / +5	Chip	EAR99	HMC649
3 - 6	6-Bit Digital	8	5.625 to 360	44	0 / +5	LP6	EAR99	HMC649LP6E
9 - 12	6-Bit Digital	6.5	5.625 to 360	38	0 / -3	Chip	EAR99	HMC643
9 - 12	6-Bit Digital	7	5.625 to 360	38	0 / -3	LC5	EAR99	HMC643LC5
9 - 12.5	6-Bit Digital	6.5	5.625 to 360	41	0 / +5	Chip	EAR99	HMC642
9 - 12.5	6-Bit Digital	7	5.625 to 360	41	0 / +5	LC5	EAR99	HMC642LC5

SMT & Chip (Die) Products

POWER DETECTORS - Log Detector/Controllers & RMS Detectors

Frequency (GHz)	Function	Dynamic Range (dB)	RSSI Slope (mV/dB)	RF Threshold Level (dBm)	Bias Supply	Package	ECCN Code	Part Number
50 Hz - 3.0	Log Detector / Controller	74 ±3	19	-66	+3.3V @ 29 mA	LP4	EAR99	HMC612LP4E
0.001 - 8.0	Log Detector / Controller	70 ±3	-25	-61	+5V @ 113 mA	LP4	EAR99	HMC602LP4E
0.001 - 10.0	Log Detector / Controller	73 ±3	-25	-65	+5V @ 103 mA	Chip	EAR99	HMC611
0.001 - 10.0	Log Detector / Controller	70 ±3	-25	-65	+5V @ 106 mA	LP4	EAR99	HMC611LP4E
0.01 - 4.0	Log Detector / Controller	70 ±3	19	-68	+3.3V @ 30 mA	LP4	EAR99	HMC601LP4E
0.05 - 4.0	Log Detector / Controller	70 ±3	19	-69	+3.3V @ 29 mA	LP4	EAR99	HMC600LP4E
0.05 - 8.0	Log Detector / Controller	54 ±1	17.5	-55	+5V @ 17 mA	LP3	EAR99	HMC713LP3E
0.1 - 2.7	Log Detector / Controller	54 ±1	17.5	-52	+5V @ 17 mA	MS8	EAR99	HMC713MS8E
8 - 30	Log Detector	54 ±3	13.3	-55	+3.3V @ 88 mA	LP3	EAR99	HMC662LP3E
1 - 23	mmW Power Detector	56 ±3	14.2	-52	+3.3V @ 91 mA	LP3	EAR99	HMC948LP3E
DC - 3.9	RMS Power Detector	60 ±1	37	-69	+5V @ 50 mA	LP4	EAR99	HMC1010LP4E
DC - 3.9	RMS, Single-Ended	72 ±1	35	-68	+5V @ 55 mA	LP4	EAR99	HMC1020LP4E
DC - 3.9	RMS, Single-Ended with Envelope Tracker	70 ±1	35	-68	+5V @ 75 mA	LP4	EAR99	HMC1021LP4E
DC - 3.9	Dual RMS, Single-Ended	70 ±1	38.5	-66	+5V @ 143 mA	LP5	EAR99	HMC1030LP5E
DC - 5.8	RMS Power Detector	40 ±1	37	-69	+5V @ 42 mA	LP4	EAR99	HMC909LP4E

SDLVAs - Successive Detection Log Video Amplifiers

Frequency (GHz)	Function	Dynamic Range (dB)	RSSI Slope (mV/dB)	RF Threshold Level (dBm)	Bias Supply	Package	ECCN Code	Part Number
0.1 - 20	SDLVA	59	14	-54	+3.3V @ 83 mA	LC4B	EAR99	HMC613LC4B
0.5 - 18.5	SDLVA, Extended Range	67	15	-62	+3.3V @ 183 mA	LP4	EAR99	HMC1013LP4E
0.6 - 20	SDLVA	59	14	-54	+3.3V @ 80 mA	Chip	EAR99	HMC913
0.6 - 20	SDLVA	59	14	-54	+3.3V @ 80 mA	LC4B	EAR99	HMC913LC4B
1 - 20	SDLVA with Limited RF Output	55	15	-53	+3.3V @ 153 mA	LC4B	EAR99	HMC813LC4B
1 - 26	SDLVA with Limited RF Output	55	14.5	-53	+3.3V @ 150 mA	Chip	EAR99	HMC813

SWITCHES

Frequency (GHz)	Function	Insertion Loss (dB)	Isolation (dB)	Input P1dB (dBm)	Control Input (Vdc)	Package	ECCN Code	Part Number
SPST & SPDT Switches								
DC - 3.5	SPST, Non-Reflective	0.6	40	32	0 / +3V	LP2C	EAR99	HMC1055LP2CE
DC - 6	SPST, Failsafe	0.7	25	27	0 / +2.2 to +5V	SOT26	EAR99	HMC550E
DC - 6	SPST, High Isolation	1.4	52	27	0 / -5V	G7 Hermetic	EAR99	HMC231G7
DC - 2.5	SPDT, Reflective	0.4	36	29	0 / -5V	S8	EAR99	HMC239AS8E
DC - 3	SPDT, Reflective	0.4	27	30	0 / +3V	MS8	EAR99	HMC190AMS8E
DC - 3	SPDT, High Isolation	0.7	50	23	0 / +5V	MS8	EAR99	HMC194MS8E
DC - 3	SPDT, Reflective	0.4	28	30	0 / +3V	SOT26	EAR99	HMC197AE
DC - 3	SPDT, Reflective	0.4	28	30	0 / +3V	SOT26	EAR99	HMC221AE
DC - 3	SPDT, Reflective	0.3	31	34	0 / +3 to +8V	SOT26	EAR99	HMC545E
DC - 3.5	SPST, Non-Reflective	0.5	45	25	0 / +5V	AMS8G	EAR99	HMC284AMS8GE
DC - 3.5	SPST, Non-Reflective	0.6	40	32	0 / +3V	LP2C	EAR99	HMC1055LP2CE
DC - 4	SPDT, Reflective	0.5	28	29	0 / -5V or +5V / 0	Chip	EAR99	HMC240A
DC - 4	SPDT, High Isolation	0.9	65	31	0 / +5V	LP4C	EAR99	HMC349LP4CE
DC - 4	SPDT, High Isolation	0.9	57	31	0 / +5V	MS8G	EAR99	HMC349MS8GE
DC - 4	SPDT, High Isolation	1.1	47	31	0 / +5V	MS8G	EAR99	HMC435MS8GE
DC - 4	SPDT, Differential	0.8	45	35	0 / +3V to	LP4	EAR99	HMC922LP4E
DC - 6	SPDT, High Isolation	1.4	50	26	0 / -5V	G7 Hermetic	EAR99	HMC232G7
DC - 6	SPDT, High Isolation	1.4	43	26	0 / -5V	G8 Hermetic	EAR99	HMC232G8
DC - 6	SPDT, High Isolation	1.4	43	26	0 / -5V	G8 Hermetic	EAR99	HMC233G8
DC - 6	SPDT, High Isolation	1.6	42	25	0 / +5V	MS8G	EAR99	HMC336MS8GE
DC - 6	SPDT, High Isolation	1.4	46	27	0 / -5V	G7 Hermetic	EAR99	HMC607G7
DC - 6	SPDT, High Isolation	0.8	60	35	0 / +3 to +5V	LP4C	EAR99	HMC849LP4CE
DC - 8	SPDT, High Isolation	1.4	50	26	0 / -5V	C8	EAR99	HMC232C8
DC - 8	SPDT, High Isolation	1.5	45	26	0 / -5V	C8	EAR99	HMC234C8
DC - 8	SPDT, High Isolation	1.2	48	23	0 / -5V	MS8G	EAR99	HMC270MS8GE
DC - 8	SPDT, High Isolation	2.0	44	23	0 / -5V	C8	EAR99	HMC347C8
DC - 8	SPDT, High Isolation	2.2	35	23	0 / -5V	G8 Hermetic	EAR99	HMC347G8
DC - 12	SPDT, High Isolation	1.5	55	27	0 / -5V	LP4	EAR99	HMC232LP4E
DC - 14	SPDT, High Isolation	1.7	44	23	0 / -5V	LP3	EAR99	HMC347LP3E
DC - 15	SPDT, High Isolation	1.4	50	26	0 / -5V	Chip	EAR99	HMC232
DC - 15	SPDT, High Isolation	1.7	60	26	0 / -5V	Chip	EAR99	HMC607
DC - 20	SPDT, High Isolation	1.7	45	23	0 / -5V	Chip	EAR99	HMC347
DC - 20	SPDT, High Isolation	1.8	47	23	0 / -5V	LP3	EAR99	HMC547LP3E

SWITCHES

Frequency (GHz)	Function	Insertion Loss (dB)	Isolation (dB)	Input P1dB (dBm)	Control Input (Vdc)	Package	ECCN Code	Part Number
DC - 28	SPDT, High Isolation	1.8	47	23	0 / -5V	LC3	EAR99	HMC547LC3
0.1 - 50	SPDT, Reflective	1.9	31	25	0 / -3V	Chip	EAR99	HMC986
55 - 86	SPDT, PIN MMIC	2	30	-	-5 / +5	Chip	5A991.h	HMC-SDD112
0.1 - 2.1	SPDT, 40W, Failsafe	0.4	22	46	0 / +3V to +8V	LP2	EAR99	HMC646LP2E
0.2 - 2.2	SPDT, 10W, Failsafe	0.4	40	> 40	0 / +3 to +8V	MS8G	EAR99	HMC546MS8GE
0.2 - 2.7	SPDT, 10W, Failsafe	0.4	35	43	0 / +3 to +8V	LP2	EAR99	HMC546LP2E
0.824 - 0.894	SPDT, 10W, T/R	0.6	22	> 40	0 / +5V	SOT26	EAR99	HMC446E
DC - 2.5	SPDT, CATV	0.6	58	28	0 / +5V	LP3	EAR99	HMC348LP3E
DC - 3	SPDT T/R	0.5	25	39	0/ +3V to +8V	MS8	EAR99	HMC174MS8E
DC - 3	SPDT, 5W, T/R	0.3	30	39	0 / +3 to +10V	MS8	EAR99	HMC574MS8E
DC - 3	SPDT, 3W, T/R	0.3	30	37	0 / +3 to +10V	SOT26	EAR99	HMC595E
DC - 4	SPDT T/R	0.25	23	39	0 / +3 to +5V	SOT26	EAR99	HMC544E
DC - 4	SPDT, 10W, T/R	0.4	30	40	0 / +3 to +8V	MS8G	EAR99	HMC784MS8GE
DC - 6	SPDT T/R	0.5	27	37	0 / +3 to +5V	MS8G	EAR99	HMC536MS8GE
DC - 6	SPDT T/R	0.6	27	37	0 / +3 to +5V	LP2	EAR99	HMC536LP2E
Multi-Throw Switches								
DC - 3.5	SP3T	0.5	44	26	TTL/CMOS	QS16	EAR99	HMC245QS16E
DC - 2	SP4T	0.8	32	24	0 / -5V	S14	EAR99	HMC182S14E
DC - 3.5	SP4T	0.5	45	25	TTL/CMOS	QS16	EAR99	HMC241QS16E
DC - 4	SP4T	0.6	47	26	TTL/CMOS	LP3	EAR99	HMC241LP3E
DC - 4	SP4T	0.7	40	25	TTL/CMOS	G16 Hermetic	EAR99	HMC244G16
DC - 8	SP4T	1.8	42	21	0 / -5V	Chip	EAR99	HMC344
DC - 8	SP4T	2.0	45	26	0 / -5V	LC3	EAR99	HMC344LC3
DC - 8	SP4T	1.8	40	21	0 / -5V	LP3	EAR99	HMC344LP3E
DC - 8	SP4T	2.2	32	21	0 / 5V	LP3	EAR99	HMC345LP3E
DC - 12	SP4T	1.8	42	27	0 / -5V	LH5 Hermetic	EAR99	HMC344LH5
DC - 18	SP4T	2.1	42	24	0 / -5V	Chip	EAR99	HMC641
DC - 20	SP4T	2.1	42	23	0 / -5V	LC4	EAR99	HMC641LC4
DC - 20	SP4T	2.3	45	22	0 / -5V	LP4	EAR99	HMC641LP4E
23 - 30	SP4T	2.8	35	25	0 / -3V	LC4	EAR99	HMC944LC4
NEW! 23 - 30	SP4T	2.8	26	-	0 / -3V	LC4	EAR99	HMC1084LC4
DC - 3	SP6T	0.8	41	24	TTL/CMOS	QS24	EAR99	HMC252QS24E
DC - 2	SP8T	1.3	30	20	0 / -5V	QS24	EAR99	HMC183QS24E
DC - 2.5	SP8T	1.1	36	23	TTL/CMOS	QS24	EAR99	HMC253QS24E
DC - 3.5	SP8T	1.2	36	24	TTL/CMOS	LC4	EAR99	HMC253LC4
DC - 8	SP8T	2.3	40	23	0 / 5V	LP4	EAR99	HMC321LP4E
DC - 8	SP8T	2.5	25	23	0 / -5V	LP4	EAR99	HMC322LP4E
DC - 10	SP8T	2	38	23	0 / -5V	Chip	EAR99	HMC322
Bypass, Diversity, Matrix & Transfer Switches								
DC - 2.5	Bypass DPDT	0.3	25	23	0 / +5V	MS8	EAR99	HMC199MS8E
5 - 6	DPDT, Diversity	1.2	20	30	0 / +5V	MS8G	EAR99	HMC393MS8GE
0.2 - 3.0	4x2 Matrix	6	44	26	0 / +5V	LP4	EAR99	HMC276LP4E
0.2 - 3.0	4x2 Matrix	6.5	43	22	0 / +3 to +5V	LP4	EAR99	HMC596LP4E
0.7 - 3.0	4x2 Matrix	5.8	33	26	0 / +5V	QS24	EAR99	HMC276QS24E
DC - 8	Transfer	1.2	42	26	0 / +5V	LP3	EAR99	HMC427LP3E

TRANSCEIVERS

Tx / Rx mmWave ICs

Frequency (GHz)	Function	P1dB (dBm) NF (dB)	Max Gain (dB)	Gain Adjust (dB)	Phase Noise @ 1 MHz Offset (dBc/Hz)	Power Dissipation (W)	Package	ECCN Code	Part Number
57 - 64	60 GHz Integrated Transmitter	12 dBm	38	17	-86	0.8	Chip	5A991.b	HMC6000
57 - 64	60 GHz Integrated Receiver	6 dB	67	65	-86	0.61	Chip	5A991.b	HMC6001

Tx / Rx mmWave ICs (w/ Antenna-in-Package)

Frequency (GHz)	Function	Antenna Gain (dBi)	P1dB (dBm)	NF (dB)	Max Gain (dB)	Gain Adjust (dB)	Phase Noise @1 MHz (dBc/Hz)	Package	ECCN Code	Part Number
57 - 64	60 GHz Tx w/ Integrated Antenna	7.5	11	-	38	17	-86	LP711	5A991.b	HMC6000LP711E
57 - 64	60 GHz Rx w/ Integrated Antenna	7.5	-	7	67	65	-86	LP711	5A991.b	HMC6001LP711E

Rx RFICs

Frequency (GHz)	Function	Input IP3 (dBm)	NF (dB)	Conv. Gain (dB)	PLL FOM (dBc/Hz) (Int./Frac.)	Package	ECCN Code	Part Number
0.7 - 3.5	Wideband Dual-Downconverter w/ Frac-N PLL/VCO	+24	9	8	-230 / -227	LP6G	5A991.b	HMC1190LP6GE

Tx RFICs

Frequency (GHz)	Function	Output IP3 (dBm)	Output P1dB (dBm)	Output Noise Floor (dBc/Hz)	PLL FOM (dBc/Hz) (Int./Frac.)	Package	ECCN Code	Part Number
0.4 - 4	Wideband Direct Modulator w/ Frac-N PLL/VCO	+30	+11	-160	-230 / -227	LP7F	5A991.b	HMC1197LP7FE

VARIABLE GAIN AMPLIFIERS

Frequency (GHz)	Function	Gain Control Range (dB)	NF * (dB)	OIP3 * (dBm)	P1dB (dBm)	Bias Supply	Package	ECCN Code	Part Number
0.5 - 6.0	Analog	-35 to 15	7.5	28	21	+5V @ 90 mA	LP5	EAR99	HMC972LP5E
2.3 - 2.5	Analog	-8 to 22	2.5	7	3	+3V @ 9 mA	MS8	EAR99	HMC287MS8E
5 - 12	Analog	22	2	34	23	+5V @ 120 mA	LP4	EAR99	HMC996LP4E
6 - 17	Analog	0 to 23	5	30	22	+5V @ 170 mA	Chip	EAR99	HMC694
6 - 17	Analog	0 to 23	6	30	22	+5V @ 175 mA	LP4	EAR99	HMC694LP4E
17 - 27	Analog	15	3.5	30	24	+5V @ 170 mA	LC4	EAR99	HMC997LC4
0.03 - 0.4	5-Bit digital, Differential Outputs	-4 to 19	5	40	25	+5V @ 240 mA	LP4	EAR99	HMC680LP4E
0.05 - 0.8	5-Bit Digital	-8 to 15	5	35	18	+5V @ 65 mA	LP4	EAR99	HMC628LP4E
0.07 - 4.0	6-Bit Digital, Serial & Parallel Control	-19.5 to 12	4	39	23	+5V @ 150 mA	LP5	EAR99	HMC742LP5E
0.5 - 4.0	6-Bit Digital, Serial & Parallel Control or Latched Parallel Control	-19 to 12.5	4	39	21.5	+5V @ 150 mA	LP5	EAR99	HMC742HFLP5E
0.7 - 1.2	6-Bit Digital, Serial & Parallel Control	-2.5 to 29	0.8	38.5	21	+5V @ 236 mA	LP5	EAR99	HMC707LP5E
0.7 - 2.7	6-Bit Digital	6.5 to 38	4.4	45	25	+5V @ 218 mA	LP5	EAR99	HMC926LP5E
DC - 1	6-Bit Digital, Serial & Parallel Control	-11.5 to 20	4.3	36	20	+5V @ 90 mA	LP5	EAR99	HMC627LP5E
DC - 1	6-Bit Digital, Parallel Control	8.5 to 40	2.8	36	20	+5V @ 176 mA	LP5	EAR99	HMC626LP5E
DC - 1	6-Bit Digital, Serial Control	13.5 to 45	2.7	36	20	+5V @ 176 mA	LP5	EAR99	HMC681LP5E
DC - 6	6-Bit Digital, Serial & Parallel Control	-13.5 to 18	6	33	19	+5V @ 88 mA	LP5	EAR99	HMC625LP5E
0.5 - 6.0	6-Bit Digital, Serial & Parallel Control	-13.5 to 18	6	33	19	+5V @ 88 mA	LP5	EAR99	HMC625HFLP5E
1.7 - 2.2	6-Bit Digital, Serial & Parallel Control	-2.5 to 29	1.0	37.5	21.5	+5V @ 252 mA	LP5	EAR99	HMC708LP5E
DC - 4	Dual 6-Bit Digital, Serial Control	-45 to 18	6	33	18	+5V @ 82 mA	LP6C	EAR99	HMC743LP6CE

** Maximum Gain State*

Automotive: Telematics & Sensors, 2 - 110 GHz and Broadband, DC - 11 GHz

24 GHz FMCW AUTOMOTIVE SENSOR

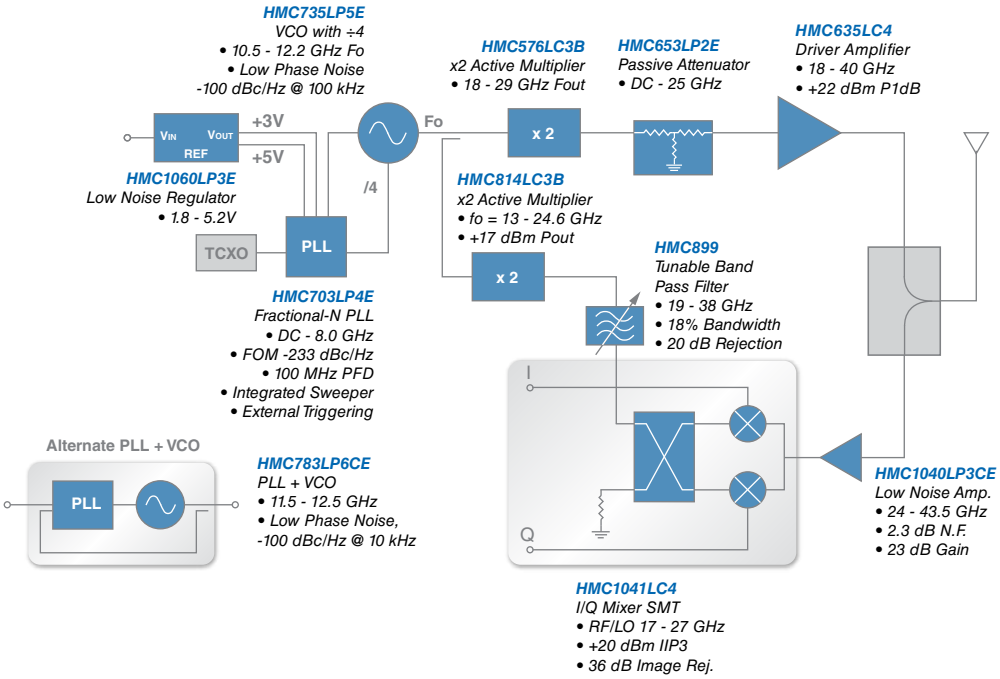

Typical Automotive application is illustrated.
See the full product listing for alternatives to the HMC products shown in each functional block.

CABLE MODEM, CATV, DBS & VOIP SOLUTIONS, 5 - 2150 MHZ

Cable Modem Termination System (CMTS)

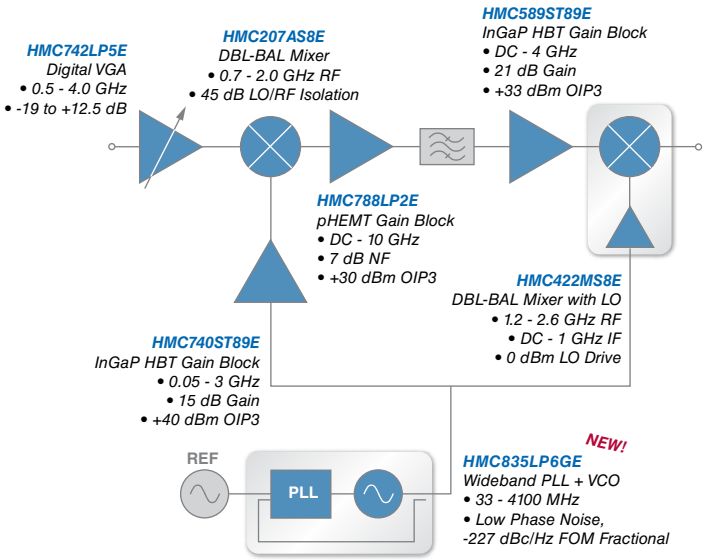

A Selection of SPNT Switches for CATV Filter & Signal Routing

Part Number	Frequency (GHz)	Function	1 GHz Loss / Isolation (dB)
HMC348LP3E	DC - 2.5	SPDT, 75 Ω	0.6 / 58
HMC349LP4CE	DC - 4	SPDT	0.9 / 65
HMC347LP3E	DC - 14	SPDT	1.7 / 44
HMC245QS16E	DC - 3.5	SP3T	0.5 / 44
HMC345LP3E	DC - 8	SP4T	2.2 / 32
HMC252QS24E	DC - 3	SP6T	2.0 / >45
HMC321LP4E	DC - 8	SP8T	2.0 / >45

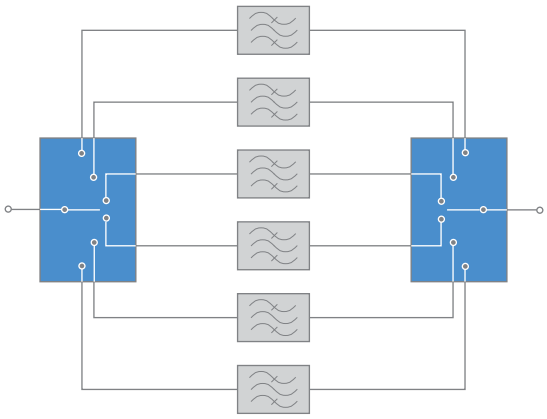

Typical Broadband applications are illustrated. See the full product listing for alternatives to the select HMC products shown in each functional block.

WiMAX & Fixed Wireless, 2 - 6 GHz

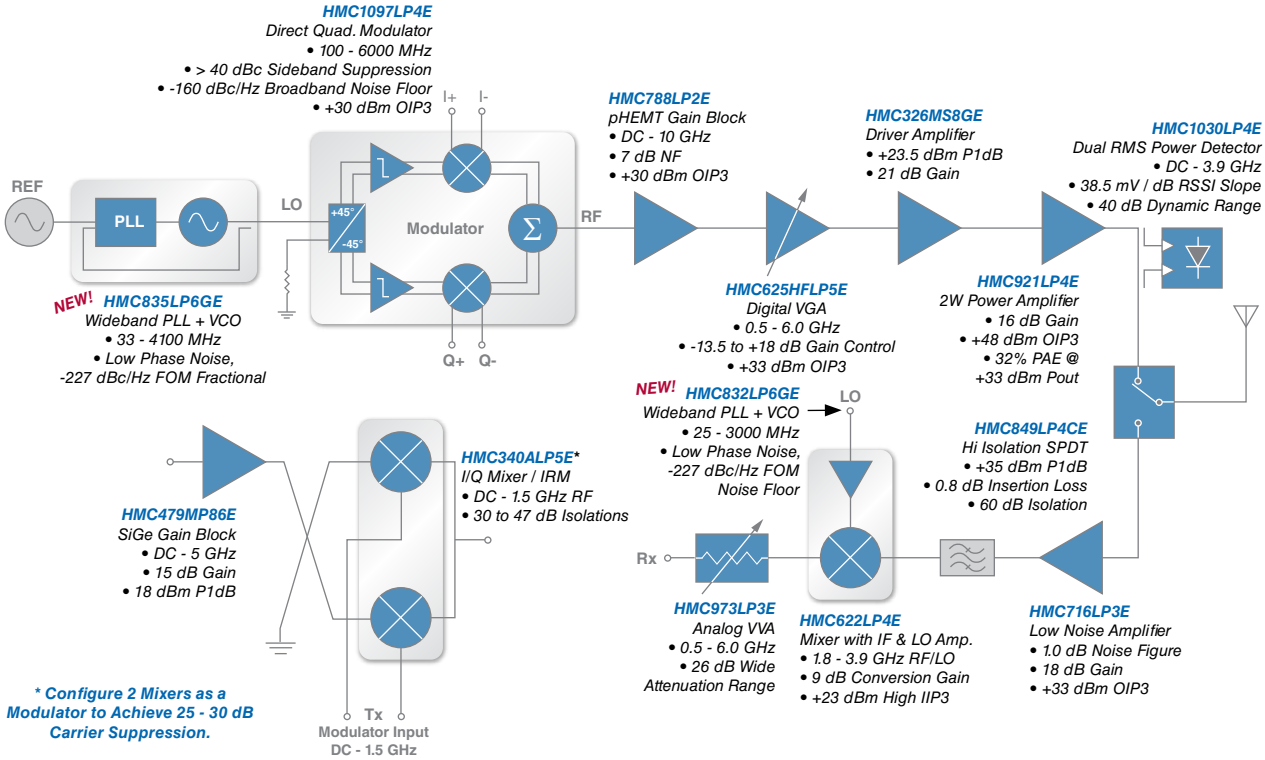

Typical WiMAX / FWA Transceiver is illustrated. See the full product listing for alternatives to the select HMC products shown in each functional block.

CDMA / GSM / TD-SCDMA Repeater Solutions

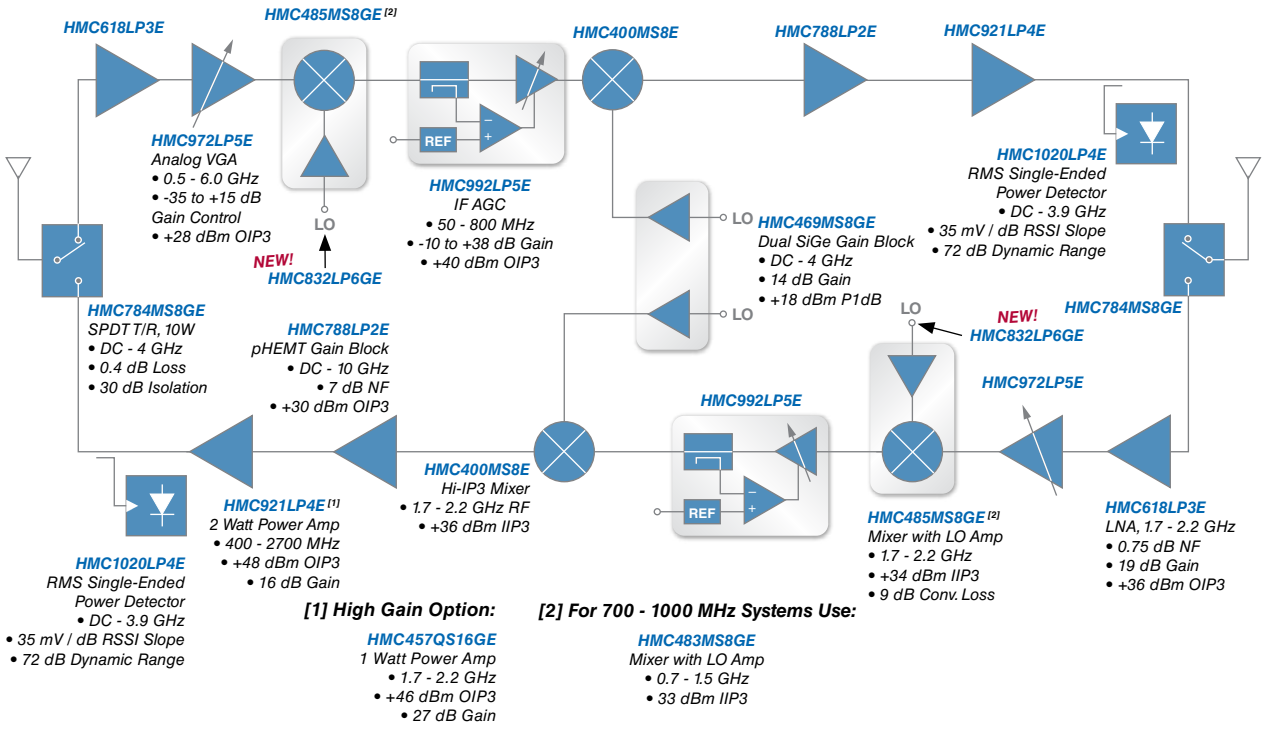

Typical Cellular/PCS/3G applications are illustrated.
See the full product listing for alternatives to the select HMC products shown in each functional block.

Cellular Infrastructure, 380 - 2690 MHz

WiMAX / LTE / 4G TRANSMITTER SOLUTIONS

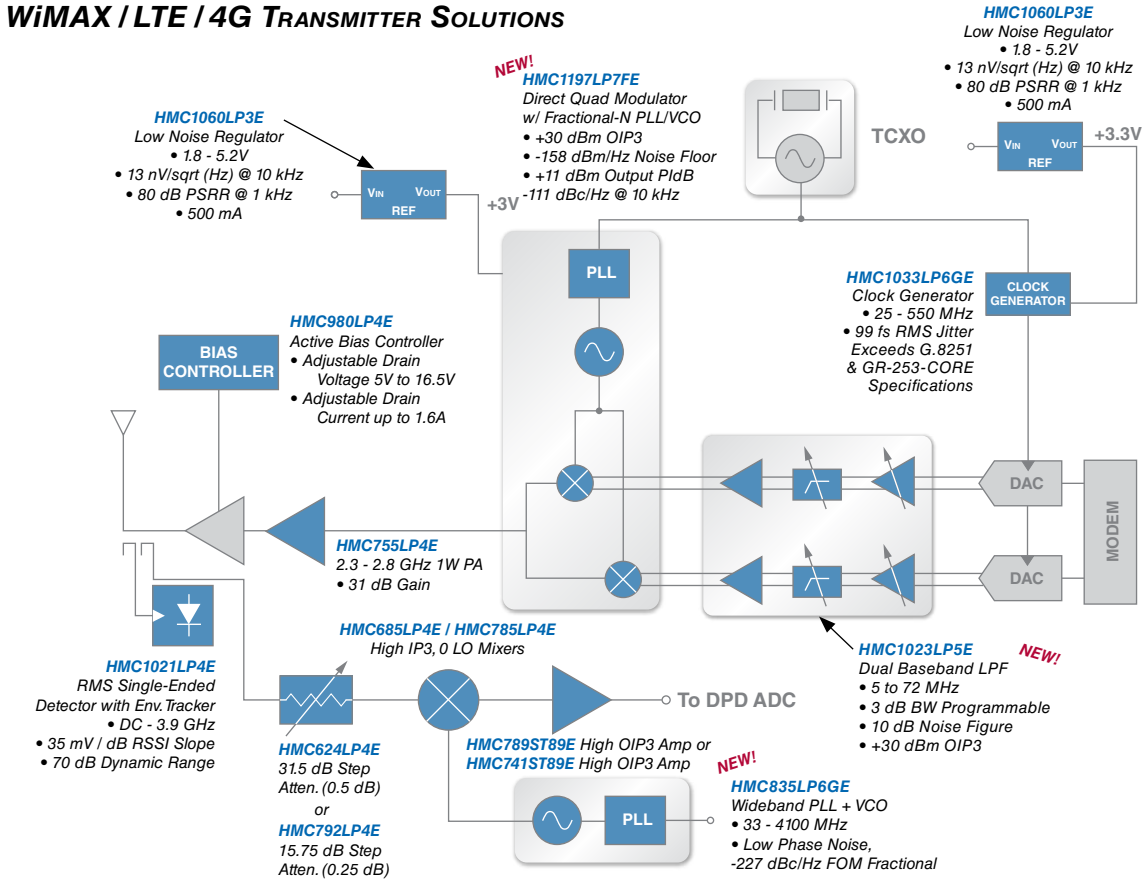

WiMAX / LTE / 4G RECEIVER SOLUTIONS FEATURING HETERODYNE DOWNCONVERSION

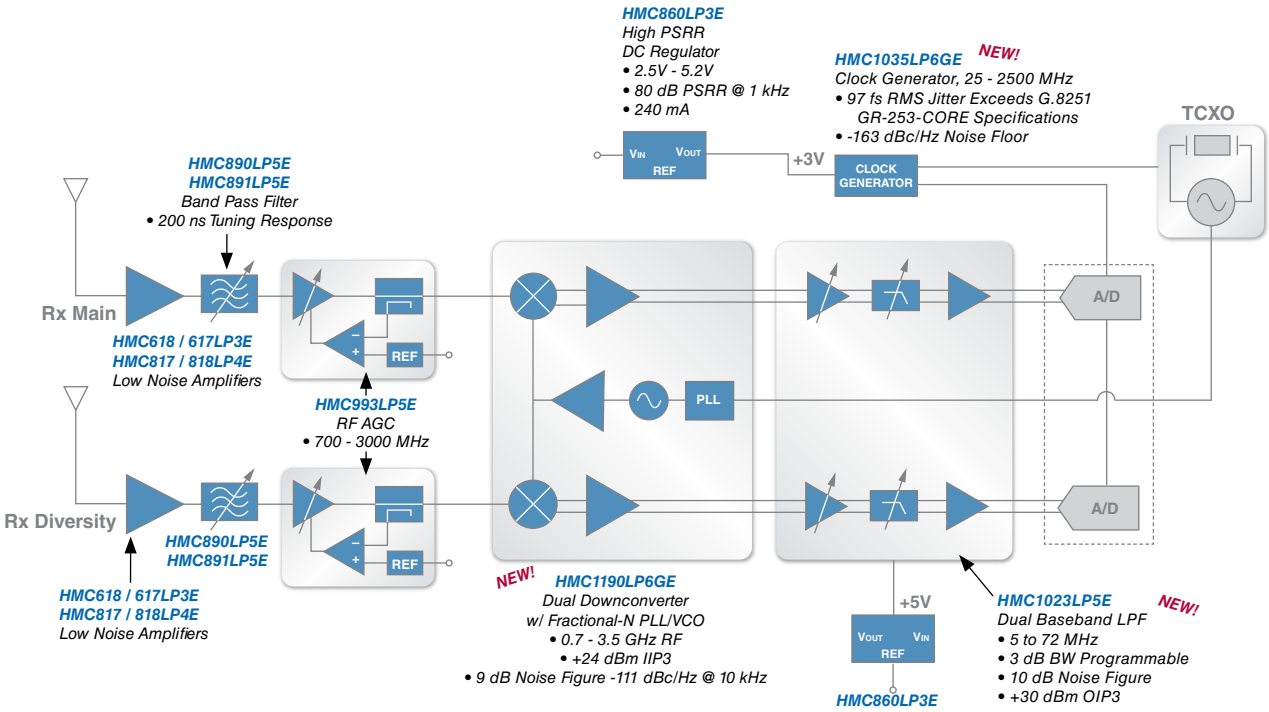

Typical WiMAX/LTE/4G applications are illustrated.
See the full product listing for alternatives to the select HMC products shown in each functional block.

DOUBLE UPCONVERSION & DIRECT DOWNCONVERSION

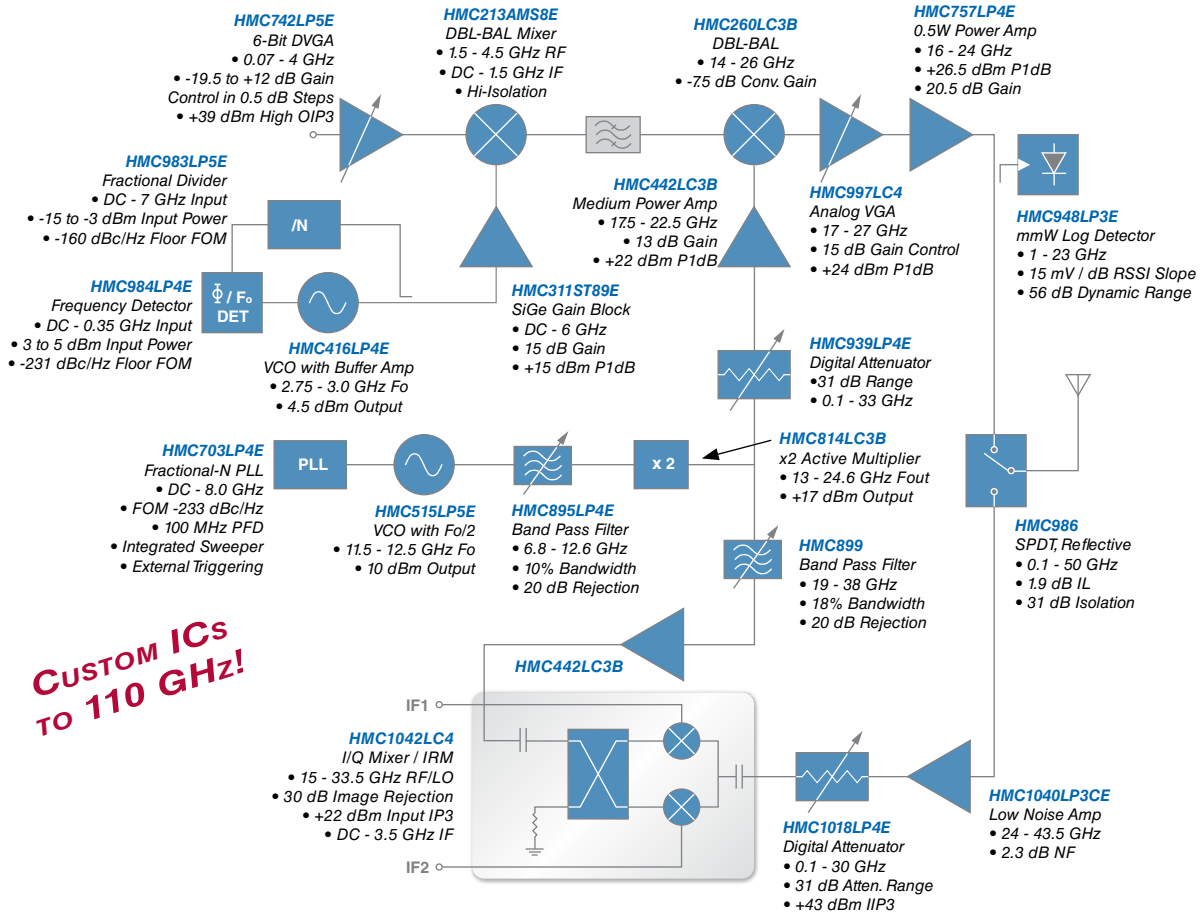

HITTITE'S HIGH FREQUENCY LO SOURCE ALTERNATIVES

PLL & VCO CHIPSET

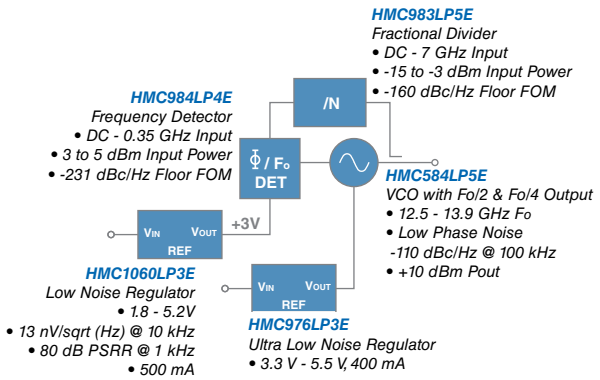

PLL WITH INTEGRATED VCO IC

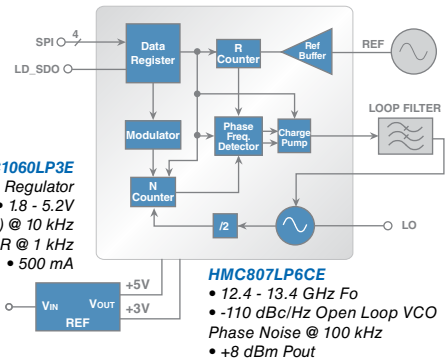

Typical Microwave / Millimeterwave application is illustrated.
See the full product listing for alternatives to the select HMC products shown in each functional block.

CHIPSETS FOR 6 TO 42 GHZ MICROWAVE RADIO BACKHAUL

Features

- *Integrated IQ Tx Upconverter IC with a X2 LO Buffer & a High Linearity Driver Amplifier*
- *High Linearity 17 - 24 GHz Power Amplifier with 40 dBm OIP3 & 32 dBm Saturated Power*
- *Low Noise Image Rejection Downconverter IC with a X2 Integrated LO Buffer*
- *Very Low Phase Noise PLL IC with an Integrated VCO*

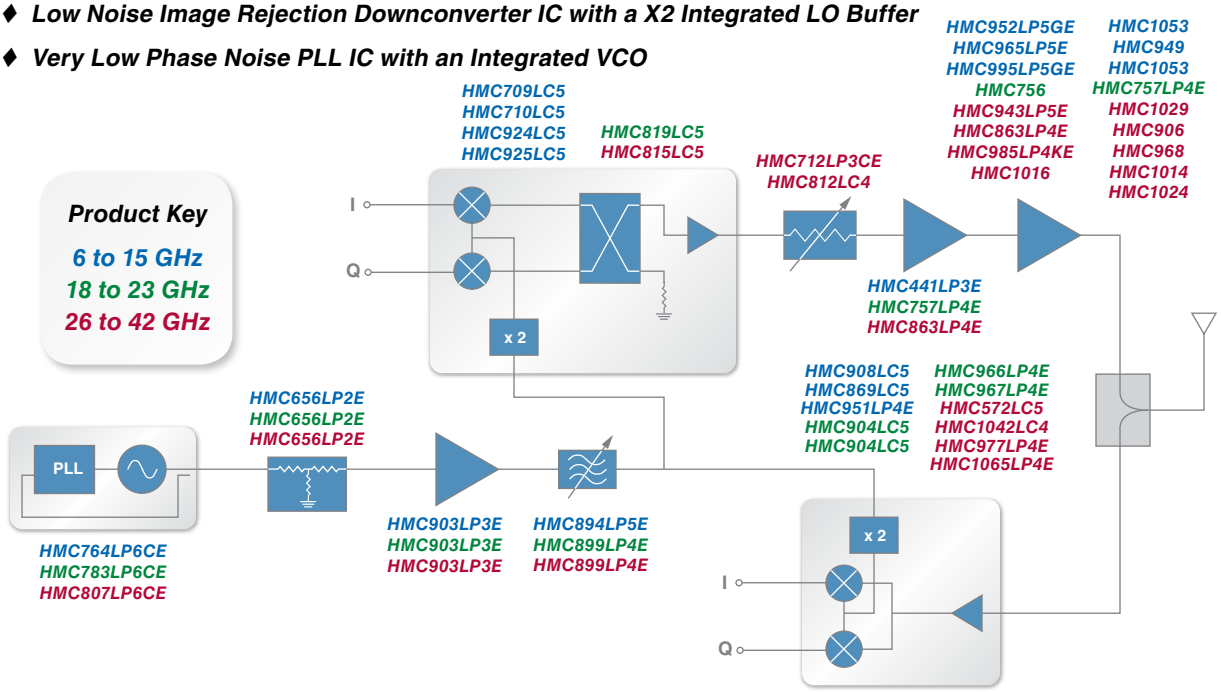

70 / 80 GHZ CHIPSET FOR E-BAND BACKHAUL RADIO

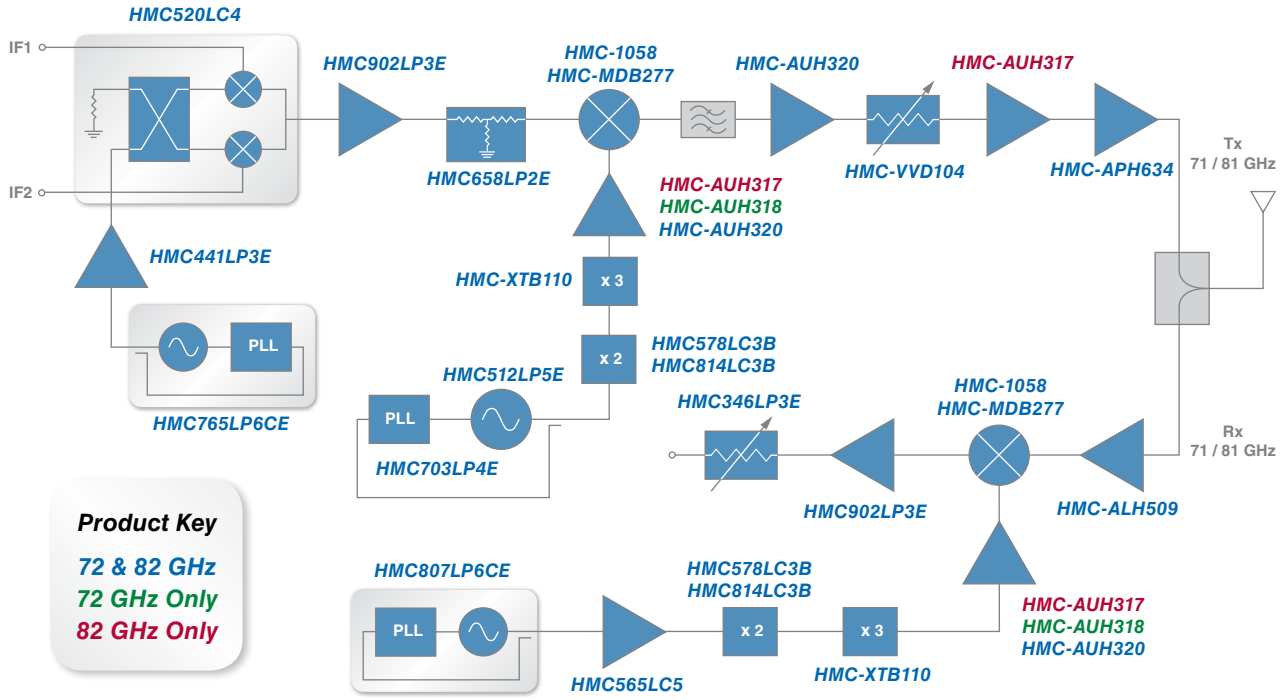

Typical Microwave / Millimeterwave application is illustrated.
See the full product listing for alternatives to the select HMC products shown in each functional block.

HMC7150LP3DE 28 Gbps EML Driver

NEW!

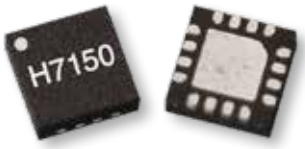

Features

- Operation up to 28.3 Gbps
- Low DC Power Dissipation,
  0.12W for 1.5 Vp-p Swing @ 3.3V Supply
  0.50W for 2.3 Vp-p Swing @ 6V Supply
- Adjustable Output Amplitude
  from 1.2 Vp-p to 2.3 Vp
- 16 Lead 3x3mm SMT Package

28Gbps Output eye Diagram @ Vdd=4.0V

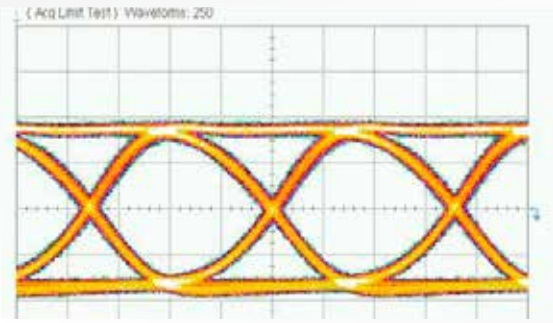

VCTL=-0.2V, VGG=-0.89V, Idd=50mA,
Vout=1.67Vpp, Pdiss=0.20W

Ideal For Fiber Optics Transponders and Wideband Test & Measurement, Up to 32 Gbps.

HMC1068 & HMC1069 Optical Modulator Drivers

NEW!

HMC1068

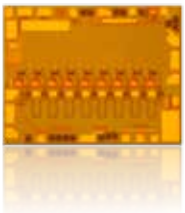

HMC1069

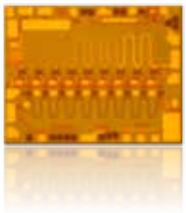

Features

- Low DC Power Dissipation
- Integrated Peak-Detect Function
- High Gain, 15dB at 16GHz
- Low Additive RMS Jitter, <300 fsec
- High Bandwidth, 12 psec Rise and Fall Times
- Small Die Size: 1.71 x 1.35 x 0.10 mm

32 Gbps NRZ Output Eye Diagram @ 5V Supply

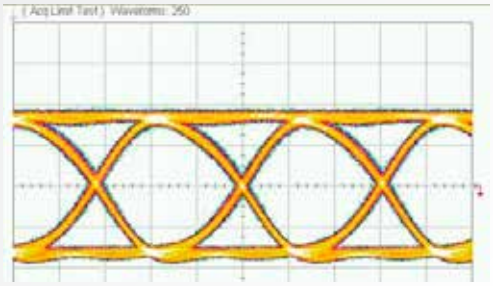

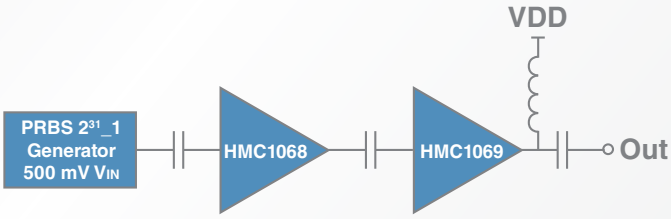

Vin=500mVpp, 32Gbps PRBS 2^{31}-1 data

Ideal for Driving 40G DQPSK / 100G DP-QPSK MZ Optical Modulators.

SMT & Chip (Die) Products

BROADBAND TIME DELAYS - *Analog & Digital*

Data / Clock Rate (Gbps / GHz)	Function	Rise / Fall (ps)	Deterministic Jitter (ps)	Differential Output Voltage Swing (Vp-p)	DC Power Consumption (mW)	Vcc Power Supply (Vdc)	Package	ECCN Code	Part Number
8 / 23	Analog Time Delay	10 / 11	-	0.5 - 0.95	630	+3.3	LC3	3A001.a.11.b	HMC877LC3
32 / 24	Analog Time Delay	14 / 14	6	0.15 - 0.6	1450	+3.3	LC4B	3A001.a.11.b	HMC910LC4B
32 / 24	Analog Time Delay	15 / 14	6	0.8	1600	+3.3	LC4	3A001.a.11.b	HMC911LC4B
28 / 28	5-Bit Digital Time Delay	20 / 18	< 2	0.5 - 1.35	610	-3.3	LC5	3A001.a.11.b	HMC856LC5

COMPARATORS - *High Speed Clocked, Latched & Window Comparators*

Analog Input B/W (GHz) / Clock Rate (Gbps)	Function	Deterministic Jitter (ps)	Propagation Delay (ps)	Output Voltage Swing (Vdc)	DC Power (mW)	Vcco / V_{term} [1] Power Supply (Vdc)	Package	ECCN Code	Part Number
10 / 20	Clocked Comparator-RSPECL	<3	120	0.4	150	+3.3 / +1.3	LC3C	3A001.a.11.b	HMC874LC3C
10 / 20	Clocked Comparator-RSCML	<3	120	0.4	130	0 / 0	LC3C	3A001.a.11.b	HMC875LC3C
10 / 20	Clocked Comparator-RSECL	<3	120	0.4	150	0 / -2.0	LC3C	3A001.a.11.b	HMC876LC3C
10 / [2]	Latched Comparator-RSPECL	2	85	0.4	140	+3.3 / 1.3	LC3C	3A001.a.11.b	HMC674LC3C
10 / [2]	Latched Comparator-RSPECL	2	85	0.4	140	+3.3 / 1.3	LP3	3A001.a.11.b	HMC674LP3E
10 / [2]	Latched Comparator-RSCML	2	100	0.4	100	0 / 0	LC3C	3A001.a.11.b	HMC675LC3C
10 / [2]	Latched Comparator-RSCML	2	100	0.4	100	0 / 0	LP3	3A001.a.11.b	HMC675LP3E
10 / [2]	Latched Comparator-RSECL	2	100	0.35	120	0 / -2.0	LC3C	3A001.a.11.b	HMC676LC3C
10 / [2]	Latched Comparator-RSECL	2	100	0.35	120	0 / -2.0	LP3	3A001.a.11.b	HMC676LP3E
10 / -	Window Comparator	2	88	0.4	240	+2 / 0	LC3C	3A001.a.11.b	HMC974LC3C

[1] Vee = -3.0V & Vcci = +3.3V [2] These products are pin for pin compatible

CROSSPOINT SWITCHES

Data / Clock Rate (Gbps / GHz)	Function	Rise / Fall Time (ps)	Deterministic Jitter (ps)	Differential Output Swing (Vppd)	DC Power per Channel (mW)	DC Power Supply (Vdc)	Package	ECCN Code	Part Number
14 / 14	2x2 Crosspoint Switch	21 / 21	2	0.5 - 1.2	150	-3.3	LC5	3A001.a.11.b	HMC857LC5
14.2 / -	13x13 Crosspoint Switch Equalization and De-emphasis	22 / 23	-	0.4 - 0.8	100	2.5V, 1.8V	BGA	3A001.a.11.b	HMC1027BG

DATA CONVERTERS

Low Power Analog-to-Digital Converters

Sample Rate (MSPS)	Function / Mode	Resolution (bits)	# of Channels	Power Dissipation [2][3]	SNR (dBFS)	SFDR (dBc)	Package	ECCN Code	Part Number
640	High Speed, Single Channel	12	1	490 mW	70	60 / 75 [1]	LP7DE	3A001.a.5.a.4	HMCAD1520
320	High Speed, Dual Channel	12	2	490 mW	70	60 / 78 [1]		3A001.a.5.a.4	
160	High Speed, Quad Channel	12	4	490 mW	70	60 / 78 [1]		3A001.a.5.a.4	
105 80	Precision, Quad Channel	14	4 4	603 mW 530 mW	74 75	83 85		3A001.a.5.a.4	
900	High Speed, Single Channel	8	1	650 mW	49.8	49 / 64	LP7DE	3A001.a.5.a.1	HMCAD1512
450	High Speed, Dual Channel	8	2	650 mW	49.8	44 / 63	LP7DE	3A001.a.5.a.1	
1000	High Speed, Single Channel	8	1	710 mW	49.8	49 / 64 [1]	LP7DE	3A001.a.5.a.1	HMCAD1511
500	High Speed, Dual Channel	8	2	710 mW	49.8	44 / 63 [1]		3A001.a.5.a.1	
250	High Speed, Quad Channel	8	4	710 mW	49.8	57 / 70 [1]		3A001.a.5.a.1	
500	High Speed, Single Channel	8	1	295 mW	49.8	49 / 65 [1]	LP7DE	3A991.c.1	HMCAD1510
250	High Speed, Dual Channel	8	2	295 mW	49.8	59 / 69 [1]		3A991.c.1	
125	High Speed, Quad Channel	8	4	295 mW	49.7	60 / 69 [1]		3A991.c.1	
20/40/50/65	Octal Channel	10	8	12/20/25/30 mW / Channel	61.6	81	LP9E	EAR99	HMCAD1104
50	Octal Channel	13 / 12	8	41 mW / Channel	72.2	82	LP9E	3A991.c.3	HMCAD1100
40	Octal Channel	13 / 12	8	35 mW / Channel	72.2	82		3A991.c.3	
20	Octal Channel	13 / 12	8	23 mW / Channel	72.2	82		3A991.c.3	

DATA CONVERTERS

Low Power Analog-to-Digital Converters

Sample Rate (MSPS)	Function / Mode	Resolution (bits)	# of Channels	Power Dissipation [2][3]	SNR (dBFS)	SFDR (dBc)	Package	ECCN Code	Part Number
65	Octal Channel	13 / 12	8	51 mW / Channel	72.2	82	LP9E	3A991.c.3	HMCAD1101
80	Octal Channel	13 / 12	8	59 mW / Channel	70.1	77	LP9E	3A991.c.3	HMCAD1102
80	Dual Channel	13 / 12	2	102 mW	72	77	LP9E	3A991.c.3	HMCAD1050-80
65	Dual Channel	13 / 12	2	85 mW	72.6	81		3A991.c.3	
40	Dual Channel	13 / 12	2	55 mW	72.7	81	LP9E	3A991.c.3	HMCAD1050-40
20	Dual Channel	13 / 12	2	30 mW	72.2	85		3A991.c.3	
80	Single Channel	13 / 12	1	60 mW	72	77	LP6HE	3A991.c.3	HMCAD1051-80
65	Single Channel	13 / 12	1	50 mW	72.6	81		3A991.c.3	
40	Single Channel	13 / 12	1	33 mW	72.7	81	LP6HE	3A991.c.3	HMCAD1051-40
20	Single Channel	13 / 12	1	19 mW	72.2	85		3A991.c.3	
80	Dual Channel	10	2	78 mW	61.6	75	LP9E	EAR99	HMCAD1040-80
65	Dual Channel	10	2	65 mW	61.6	77		EAR99	
40	Dual Channel	10	2	43 mW	61.6	81	LP9E	EAR99	HMCAD1040-40
20	Dual Channel	10	2	24 mW	61.6	81		EAR99	
80	Single Channel	10	1	46 mW	61.6	75	LP6HE	EAR99	HMCAD1041-80
65	Single Channel	10	1	38 mW	61.6	77		EAR99	
40	Single Channel	10	1	25 mW	61.6	81	LP6HE	EAR99	HMCAD1041-40
20	Single Channel	10	1	15 mW	61.6	81		EAR99	
NEW! 80 / 105 / 125	Quad Channel	14	4	490 / 605 / 765 mW	74	85	LP7DE	3A991.c.3	HMCAD1062
NEW! 80 / 105 / 125	Dual Channel	14	2	300 / 380 / 460 mW	74	85	LP7DE	3A991.c.3	HMCAD1062B
NEW! 400	Dual Channel	14	2	750 mW / Channel	72	85	LG9E / LP9E	3A001.a.5.a.4	HMCAD1063
NEW! 400	Dual Channel	16	2	1100 mW / Channel	76	90	LG9E	3A001.a.5.a.5	HMCAD1073

[1] Excluding Interleaving Spurs.

Ultra High Speed Analog-to-Digital Converters

Input Frequency (GHz)	Function	Sample Rate (GSPS)	Resolution (Bits)	ENOB	SFDR (dBFS)	Package	ECCN Code	Part Number
20	3-Bit ADC with 1:2 Demux	26	3	2.9	26	LP9	3A001.a.11.b	HMCAD5831LP9BE

Track-and-Hold Amplifiers

Input Frequency (GHz)	Function	Single Tone THD/SFDR (dB)	Maximum Clock Rate (GSPS)	Output Noise (mV RMS)	Hold Mode Feed-through Rejection (dB)	Package	ECCN Code	Part Number
DC - 5	Track-and-Hold	-65 / 67	4.0	0.86	> 60	LC4B	3A001.a.11.b	HMC760LC4B
DC - 18	Track-and-Hold	-65 / 67	4.0	1.05	> 60	LC4B	3A001.a.11.b	HMC661LC4B
0.02 - 4.5	Track-and-Hold	-66 / 67	3	0.95	> 60	LC4B	3A001.a.11.b	HMC660LC4B
NEW! 18	Dual Rank Track-and-Hold	55 / 56	4	1.4	> 65	LC5	3A001.a.11.b	HMC1061LC5

Multi-GHz Quantizer

Input Frequency (GHz)	Function	Content	Sampling Rate (MSPS)	SFDR	SNR	Input Signal Range (Vp - p)	Package	ECCN Code	Part Number
DC - 18	High Speed Data Aquisition	HMC6804LC4B T/H, Amplifier, HMCAD8101 ADC	1000	>50 dB @ 7 GHz	>40 dB @ 9 GHZ	1	LC4B LP7DE	3A001.a.5.a.1	EKIT01-HMC9000

DC POWER CONDITIONING - Linear Voltage Regulators

Input Voltage (V)	Function	Output Voltage (V)	Output Current (mA)	Power Supply Rejection Ratio (PSRR) (dB)		Output Noise Spectral Density (nV/√Hz)		Regulated Outputs	Package	ECCN Code	Part Number
				1 kHz	1 MHz	1 kHz	10 kHz				
3.35 - 5.6	Quad High PSRR	2.5 - 5.2	15 - 100	80	60	7	3	4	LP3	EAR99	HMC860LP3E
3.35 - 5.6	Low Noise, High PSRR	1.8 - 5.2	500	80	60	7	3	4	LP3	EAR99	HMC1060LP3E
4.8 to 5.6	Low Noise, High PSRR	1.8 to 5.1	400	60	30	6	3	1	LP3	EAR99	HMC976LP3E

DC POWER MANAGEMENT - Active Bias Controller

Supply Voltage Range (V)	Function	VDRAIN Voltage Range (V)	IDRAIN Bias Current (mA)	IGATE Drive Current (mA)	VGATE Voltage Range (V)	Over / Under IDRAIN Current Alarm	Low VDD Alarm	Package	ECCN Code	Part Number
4 to 12	Active Bias Controller	4 to 12	20 to 200	-0.8 to +0.8	-2.5 to +2.0	-	-	Chip	EAR99	HMC981
4 to 12	Active Bias Controller	4 to 12	0 to 200	-0.8 to +0.8	-2.5 to +2.5	-	-	LP3	EAR99	HMC981LP3E
5 to 16.5	Active Bias Controller	3 to 15	0 to 500	-4 to +4	-2.5 to +2.5	Yes	Yes	LP5	EAR99	HMC920LP5E

DC POWER MANAGEMENT - *Active Bias Controller*

Supply Voltage Range (V)	Function	VDRAIN Voltage Range (V)	IDRAIN Bias Current (mA)	IGATE Drive Current (mA)	VGATE Voltage Range (V)	Over / Under IDRAIN Current Alarm	Low VDD Alarm	Package	ECCN Code	Part Number
5 - 16.5	Active Bias Controller	5 - 16.5	50 - 1600	-4 to +4	-2.46 to +2.04	Yes	-	Chip	EAR99	HMC980
5 to 16.5	Active Bias Controller	5 to 16.5	50 to 1600	-4 to +4	-2.46 to +2.04	Yes	-	LP4	EAR99	HMC980LP4E

HIGH SPEED DIGITAL LOGIC

Data / Clock Rate (Gbps / GHz)	Function	Rise / Fall Time (ps)	Deterministic Jitter (ps)	Differential Output Swing (Vppd)	DC Power (mW)	DC Power Supply (Vdc)	Package	ECCN Code	Part Number
1:2 & 1:4 Fanout Buffers									
13 / 13	Fast Rise Time 1:2 Fanout Buffer*	19 / 18	2	0.6 - 1.1	300	-3.3 or +3.3	LP3	3A001.a.11.b	HMC720LP3E
13 / 13	Fast Rise Time 1:2 Fanout Buffer	19 / 18	2	1.1	300	-3.3 or +3.3	LC3	3A001.a.11.b	HMC724LC3
13 / 13	Fast Rise Time 1:2 Fanout Buffer*	22 / 20	2	0.6 - 1.2	290	-3.3 or +3.3	LC3	3A001.a.11.b	HMC744LC3
28 / 20	1:2 Fanout Buffer*	16 / 15	2	0.6 - 1.1	315	-3.3 or +3.3	LC3	3A001.a.11.b	HMC850LC3
45 / 28	1:2 Fanout Buffer w/ Adj. Vout*	11 / 11	3	0.4 - 1.2	465	-3.3	LC4B	3A001.a.11.b	HMC842LC4B
13 / 13	1:4 Fanout Buffer*	26 / 25	4	0.6 - 1.4	440	-3.3 or +3.3	LC4B	3A001.a.11.b	HMC940LC4B
2:1 Selectors									
14 / 14	2:1 Differential Selector*	19 / 20	2	0.5 - 1.3	221	-3.3 or +3.3	LC4B	3A001.a.11.b	HMC858LC4B
13 / 13	2:1 Differential Selector	17 / 15	-	0.6 - 1.2	250	-3.3 or +3.3	LC3C	3A001.a.11.b	HMC678LC3C
13 / 13	2:1 Differential Selector	17 / 15	-	1.1	250	-3.3 or +3.3	LC3C	3A001.a.11.b	HMC728LC3C
13 / 13	2:1 Selector*	22 / 22	2	0.6 - 1.2	250	-3.3 or +3.3	LC3C	3A001.a.11.b	HMC748LC3C
14 / 14	4:1 Selector*	17 / 17	2	0.5 - 1.3	294	-3.3 or +3.3	LC5	3A001.a.11.b	HMC958LC5
AND / NAND / OR / NORs									
13 / 13	Fast Rise Time AND / NAND / OR / NOR w/ Adj. Vout*	19 / 18	2	0.6 - 1.1	230	-3.3 or +3.3	LC3C	3A001.a.11.b	HMC722LC3C
13 / 13	Fast Rise Time AND / NAND / OR / NOR*	19 / 18	2	0.6 - 1.1	230	-3.3 or +3.3	LP3	3A001.a.11.b	HMC722LP3E
13 / 13	Fast Rise Time AND / NAND / OR / NOR	19 / 18	2	1.1	230	-3.3 or +3.3	LC3C	3A001.a.11.b	HMC726LC3C
13 / 13	Fast Rise Time AND / NAND / OR / NOR*	22 / 21	2	0.6 - 1.2	230	-3.3 or +3.3	LC3C	3A001.a.11.b	HMC746LC3C
28 / 28	AND / NAND / OR / NOR*	15 / 14	2	0.6 - 1.5	241	-3.3 or +3.3	LC3C	3A001.a.11.b	HMC852LC3C
45 / 25	AND / NAND / OR / NOR*	10 / 10	2	0.2 - 0.9	530	-3.3	LC4B	3A001.a.11.b	HMC843LC4B
Clock Dividers									
- / 26	Clock Divide-by-4*	19 / 19	2	0.8 - 1.8	281	-3.3 or +3.3	LC3	3A001.a.11.b	HMC959LC3
- / 26	Clock Divide-by-8*	19 / 17	2	0.8 - 1.8	520	-3.3 or +3.3	LC3	3A001.a.11.b	HMC859LC3
D-Type Flip-Flops									
14 / 14	Dual D-Type Flip-Flop with Common Clock*	22 / 20	2	0.6 - 1.3	442	-3.3 or +3.3	LC4B	3A001.a.11.b	HMC953LC4B
13 / 13	Fast Rise Time D-Type Flip-Flop with Adj. Vout*	19 / 17	2	0.7 - 1.3	264	-3.3 or +3.3	LC3C	3A001.a.11.b	HMC723LC3C
13 / 13	Fast Rise Time D-Type Flip-Flop*	19 / 17	2	0.7 - 1.3	260	-3.3 or +3.3	LP3	3A001.a.11.b	HMC723LP3E
13 / 13	Fast Rise Time D-Type Flip-Flop	19 / 17	2	1.1	260	-3.3 or +3.3	LC3C	3A001.a.11.b	HMC727LC3C
13 / 13	Fast Rise Time D-Type Flip-Flop*	22 / 20	2	0.7 - 1.2	264	-3.3 or +3.3	LC3C	3A001.a.11.b	HMC747LC3C
28 / 28	D-Type Flip-Flop*	15 / 14	2	0.7 - 1.3	260	-3.3 or +3.3	LC3	3A001.a.11.b	HMC853LC3
43 / 43	D-Type Flip-Flop*	12 / 12	2	0.2 - 0.85	630	-3.3	LC4B	3A001.a.11.b	HMC841LC4B
NRZ-to-RZ Converters									
13 / 13	NRZ-to-RZ Converter	15 / 13	2	0.3 - 1.2	594	-3.3 or +3.3	LC3C	3A001.a.11.b	HMC706LC3C
T Flip-Flops									
26 / 26	T Flip-Flop w/ Reset*	18 / 17	2	0.4 - 1.1	270	-3.3 or +3.3	LC3C	3A001.a.11.b	HMC679LC3C
26 / 26	T Flip-Flop w/ Reset*	18 / 17	2	1.1	270	-3.3 or +3.3	LC3C	3A001.a.11.b	HMC729LC3C
26 / 26	T Flip-Flop w/ Reset*	18 / 17	2	0.6 - 1.2	270	-3.3 or +3.3	LC3C	3A001.a.11.b	HMC749LC3C
XOR / XNORs									
13 / 13	Fast Rise Time XOR / XNOR w/ Adj. Vout*	19 / 18	2	0.6 - 1.2	230	-3.3 or +3.3	LC3C	3A001.a.11.b	HMC721LC3C
13 / 13	Fast Rise Time XOR / XNOR*	19 / 18	2	0.6 - 1.2	230	-3.3 or +3.3	LP3	3A001.a.11.b	HMC721LP3E
13 / 13	Fast Rise Time XOR / XNOR	19 / 18	2	1.1	230	-3.3 or +3.3	LC3C	3A001.a.11.b	HMC725LC3C
13 / 13	Fast Rise Time XOR / XNOR*	21 / 19	2	0.6 - 1.2	240	-3.3 or +3.3	LC3C	3A001.a.11.b	HMC745LC3

HIGH SPEED DIGITAL LOGIC

Data / Clock Rate (Gbps / GHz)	Function	Rise / Fall Time (ps)	Deterministic Jitter (ps)	Differential Output Swing (Vppd)	DC Power (mW)	DC Power Supply (Vdc)	Package	ECCN Code	Part Number
28 / 28	XOR / XNOR*	15 / 14	2	0.6 - 1.4	241	-3.3 or +3.3	LC3C	3A001.a.11.b	HMC851LC3C
45 / 28	XOR / XNOR*	11 / 10	3	0.2 - 8.5	512	-3.3	LC4B	3A001.a.11.b	HMC844LC4B

** These products feature programmable output voltage swing.*

1:9 Fanout Buffer

Clock Rate (GHz)	Function	Input	Output	Phase Jitter (12 k to 20 MHz)	Rise/Fall Time (ps)	Channel Skew (ps)	Disable Mode	Power Supply (V)	Package	ECCN Code	Part Number
DC - 8	1:9 Fanout Buffer	LVPECL, LVDS, CML, CMOS	LVPECL	8 fs RMS	65	3.1	Yes	3.3	LP5	3A001.a.11.b	HMC987LP5E

IF / BASEBAND PROCESSING - Dual Baseband Low Pass Filter & Dual Baseband Digital VGA

Dual Baseband Low Pass Filter

3 dB Bandwidth Setting (MHz)	Function	3 dB Bandwidth Accuracy (%)	Gain (dB)	NF (dB)	OIP3 (dBm)	Package	ECCN Code	Part Number
3.5 - 50	Dual Low Pass with ADC Driver	±2.5	0 / 10	12	30	LP5	EAR99	HMC900LP5E
5 - 72	Dual Low Pass with ADC Driver	± 2.5	0 / 10	10	30	LP5	EAR99	HMC1023LP5E

Dual Baseband Digital VGA

Frequency (MHz)	Function	NF (dB)	Variable Gain (dB)	OIP3 (dBm)	OIP2 (dBm)	Sideband Supp. (dB)	Magnitude (dB) / Phase (deg) Balance	Bias Supply	Package	ECCN Code	Part Number
DC - 100	Digital, Serial & Parallel Control	6	0 to 40	+30	+65	55	±0.1 / ±1	+5V @ 70 mA	LP4	EAR99	HMC960LP4E

INTERFACE - RF Switch, Attenuator & Phase Shifter Digital Drivers

Bit Rate (mbps)	Function	Input	Output Voltage (V)	Output Current (mA)	Bias Supply	Package	ECCN Code	Part Number
10	6-Bit Switch Driver / Controller	TTL/CMOS	-5 / +2.2	1	+5V @ 1.5 mA	LP5	EAR99	HMC677LP5E
10	6-Bit Switch Driver / Controller	TTL/CMOS	-5 / +2.2	1	+5V @ 1 mA	G32	EAR99	HMC677G32

LIMITING AMPLIFIERS

Data Rate (Gbps)	Function	Small Signal Bandwidth (GHz)	Differential Gain (dB)	Deterministic Jitter (ps p-p)	Additive Random Jitter (ps rms)	Supply Current	Package	ECCN Code	Part Number
12.5	Limiting Amplifier	11	44	5	0.2	+5V @ 106 mA	LP4	EAR99	HMC750LP4E
12.5	Limiting Amplifier with LOS	9.5	32	-	0.9	+3.3V @ 47 mA	LP4	EAR99	HMC914LP4E
32	Limiting with DC Offset Cancellation	26.5	30	5.6	0.3	+3.3V @ 90 mA	LC3	EAR99	HMC865LC3
32	Limiting without DC Offset Cancellation	26.5	29	6.84	0.3	+3.3V @ 85 mA	LC3	EAR99	HMC866LC3

MUX & DEMUX

Data / Clock Rate (Gbps / GHz)	Function	Rise / Fall (ps)	Deterministic Jitter (ps)	Differential Output Voltage Swing (Vppd)	DC Power Consumption (mW)	Vee Power Supply (Vdc)	Package	ECCN Code	Part Number
32 / 16	2:1 Mux*	15 / 15	-	0.8 - 1.5	480	-3.3 or +3.3	LC4B	3A001.a.11.b	HMC954LC4B
28 / 14	4:1 Mux*	16 / 16	4	0.7 - 1.25	510	-3.3 or +3.3	LC5	3A001.a.11.b	HMC854LC5
45 / 22.5	4:1 Mux*	11 / 12	3	0.25 - 0.9	1782	+3.3	LC5	3A001.a.11.b	HMC847LC5
32 / 16	1:2 Demux with High Speed Invert*	19 / 18	< 3	0.5 - 1.2	644	-3.3 or +3.3	LC4B	3A001.a.11.b	HMC955LC4B
28 / 14	1:4 Demux*	22 / 22	-	0.45 - 1.14	644	-3.3 or +3.3	LC5	3A001.a.11.b	HMC855LC5
45 / 22.5	1:4 Demux*	25 / 21	4	0.3 - 1.0	1782	+3.3	LC5	3A001.a.11.b	HMC848LC5

** With Programmable Output Voltage and/or Duty Cycle Control*

OPTICAL MODULATOR DRIVERS

	Data Rate Max. (Gbps)	Function	Gain (dB)	Group Delay Variation (ps)	Additive Jitter (ps)	Output Voltage Max. (Vp-p)	Package	ECCN Code	Part Number
	22.5	8Vpp Optical Modulator Driver	18	±15	0.3	8	LC5	EAR99	HMC870LC5 [1]
	22.5	3Vpp Optical Modulator Driver	15	±15	0.3	3	LC5	EAR99	HMC871LC5 [1]
NEW!	28.3	28 Gbps EML Driver	11	±7	0.27	2.2	LP3D	EAR99	HMC7150LP3DE
	32	Quad Optical Modulator Driver	26	±4	0.23	7.5	Module	EAR99	HMC6282A [2]
	32	3Vpp Optical Modulator Driver, with Peak Detect	14	±5	0.3	3	Chip	EAR99	HMC1050 [1] [2]
NEW!	32	32 Gpbs Optical Modulator Driver, Pre-Stage	15	±5	0.3	3	Chip	EAR99	HMC1068
NEW!	32	32 Gbps Optical Modulator Driver	15	±5	0.3	7.5	Chip	EAR99	HMC1069

Baseband and Zero IF Communication

OPTICAL MODULATOR DRIVERS

Data Rate Max. (Gbps)	Function	Gain (dB)	Group Delay Variation (ps)	Additive Jitter (ps)	Output Voltage Max. (Vp-p)	Package	ECCN Code	Part Number
32	8Vpp Optical Modulator Drive, with Peak Detect	16	±5	0.3	8	Chip	EAR99	HMC1051 [1] [2]
32	8Vpp Optical Modulator Driver, SMT Package	32	±7	0.25	8	BGA	EAR99	HMC5850BG [1] [2]
32	Dual-Channel Optical Modulator Driver	30	±4	0.3	8	BGA	EAR99	HMC6620BG

[1] Drivers that benefit from Hittite Active Bias Controllers [2] Request Data Sheet: FO@hittite.com

SIGNAL CONDITIONER

Data Rate Max. (Gbps)	Function	Number of Taps	Differential Input Sensitivity (mVpp)	Tap Delay (ps)	Total Harmonic Distortion (%)	Package	ECCN Code	Part Number
32	Advanced Linear Equalizer	9	20	18	5	LP5	3A001.a.11.b	HMC6545LP5

TRANSIMPEDANCE AMPLIFIERS

Data Rate (Gbps)	Function	Transimpedance (kΩ)	Input Overload (mApp)	Small Signal Bandwidth (GHz)	Deterministic Jitter (ps)	Noise (pA/√Hz)	Package	ECCN Code	Part Number
0.1 - 1.0	Low Noise Transimpedance Amplifier	10	20	0.7	< 100	4.6	LP3	EAR99	HMC799LP3E
1 - 10	Transimpedance Amplifier	1.25	3	7.5	< 10	11	Chip	EAR99	HMC690
43	Transimpedance Amplifier	4	4	35	-	20	Chip	3A001.b.2.d	HMC7590

DIRECT CONVERSION RECEIVER WITH DIVERSITY FEATURING THE HMCAD1520 A/D CONVERTER

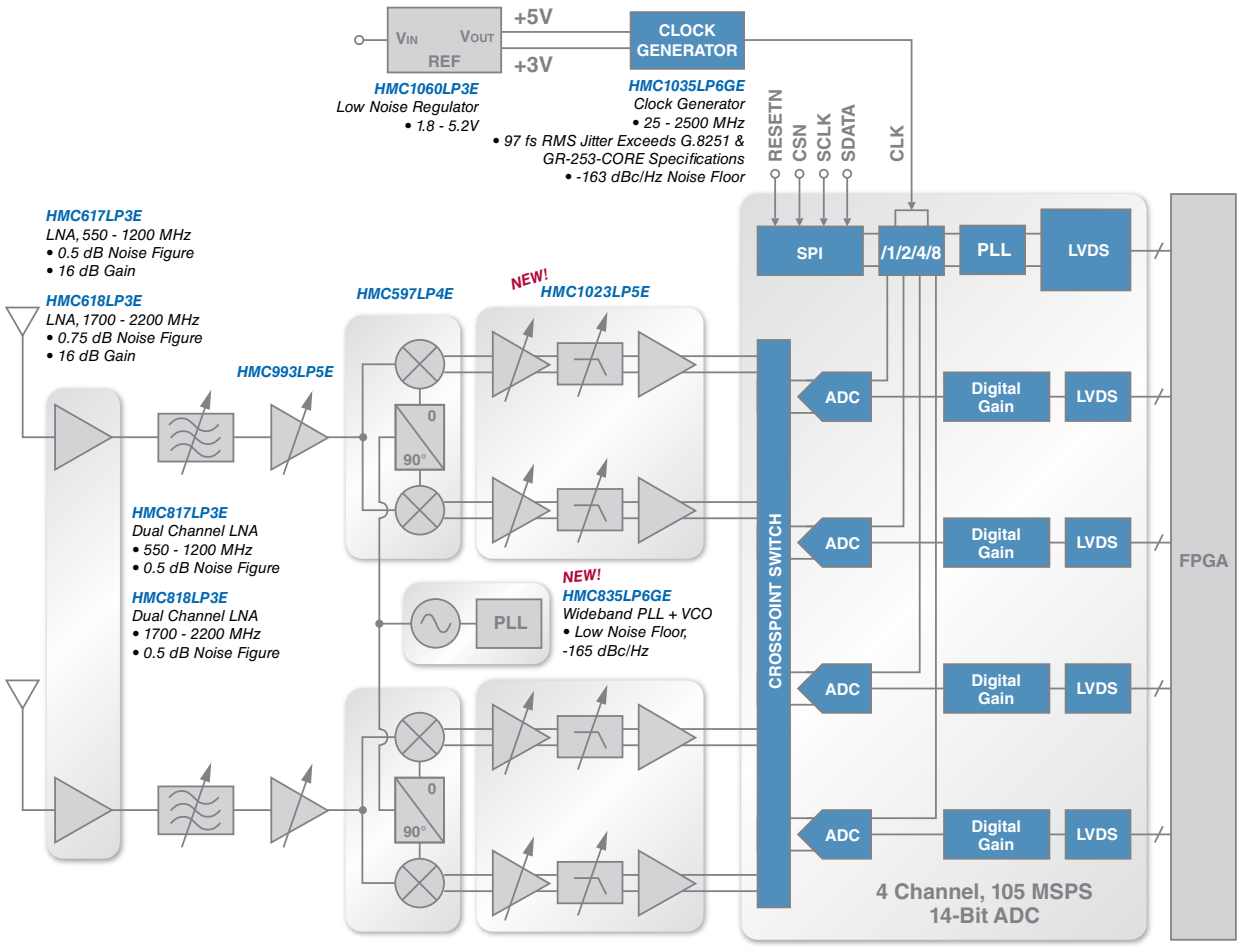

ADC / DAC CLOCK DRIVER CIRCUIT

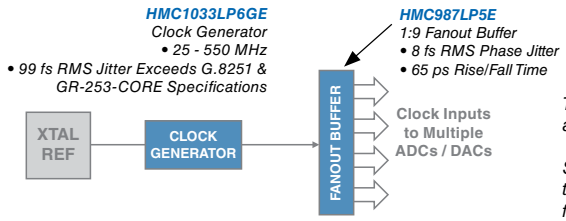

Typical Fiber Optic & Networking applications are illustrated.

See the full product listing for alternatives to the select HMC products shown in each functional block.

100G DWDM TRANSPONDER TRANSMIT PATH

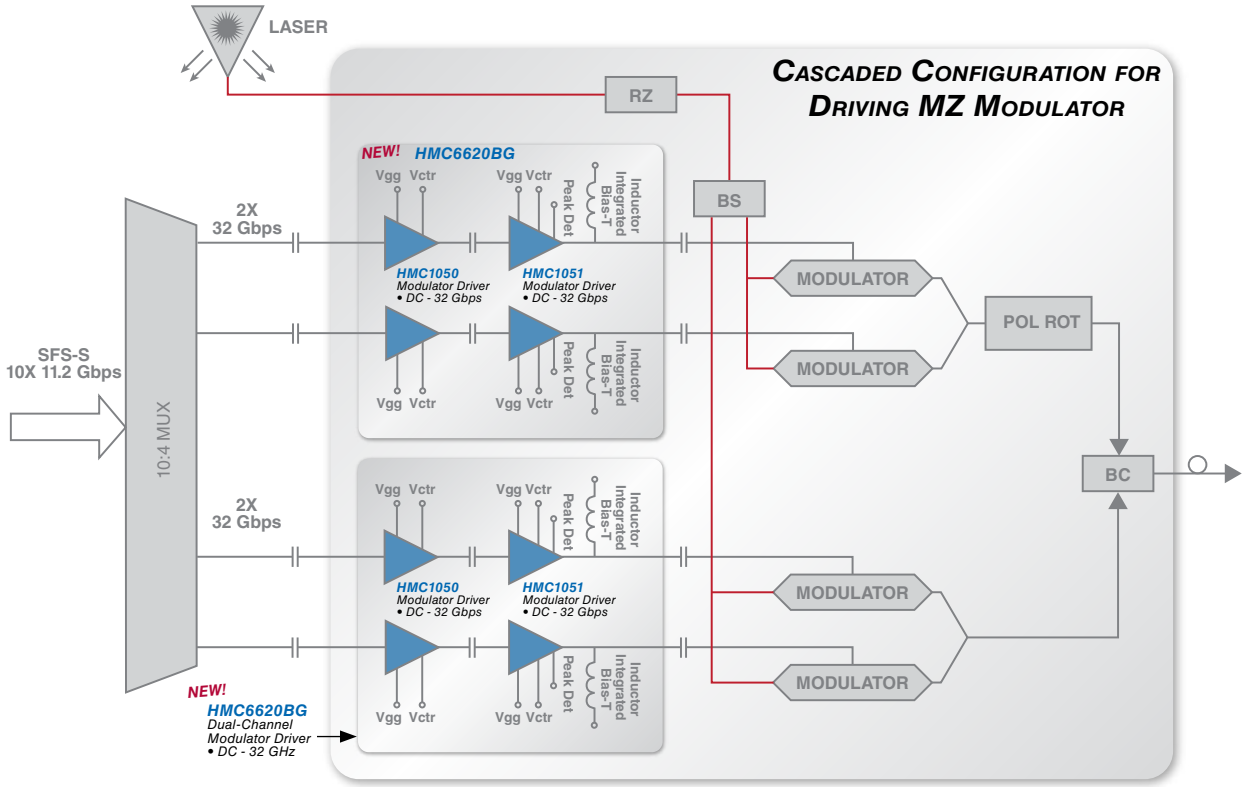

Typical Fiber Optic & Networking applications are illustrated.
See the full product listing for alternatives to the select HMC products shown in each functional block.

43 Gbps Hogge Phase Detector for Clock & Data Recovery

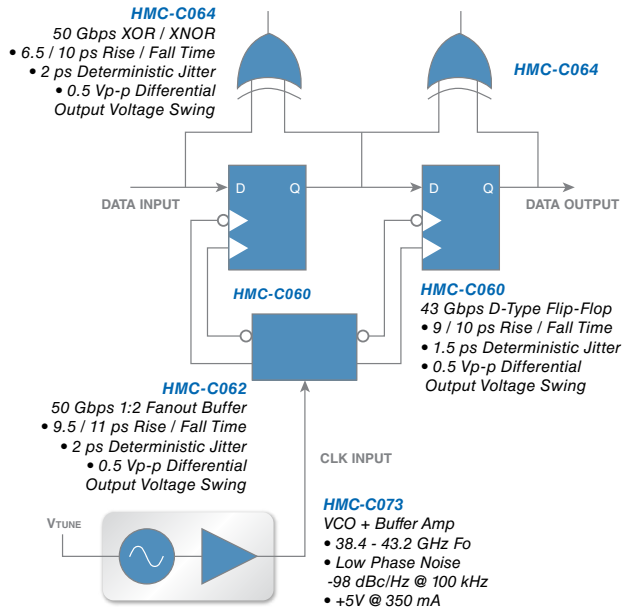

13 Gbps, NRZ-to-RZ Conversion

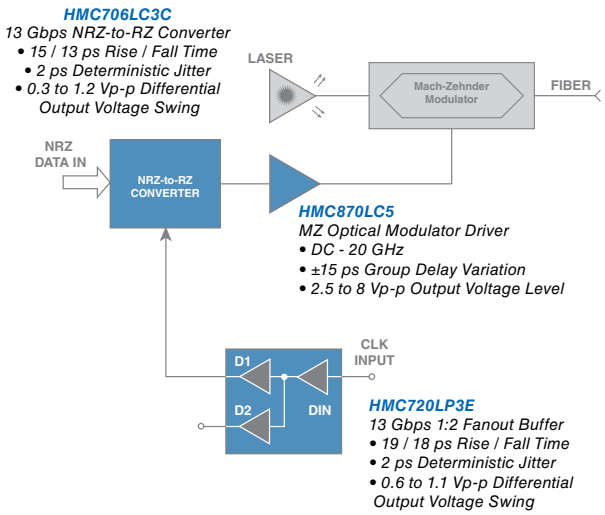

Typical Fiber Optic & Networking applications are illustrated.
See the full product listing for alternatives to the select HMC products shown in each functional block.

SMT & Chip (Die) Products & Clock Generators for Data Converters Clocking

Clock Distribution

Max. Clock Rate (GHz)	Function	Input	Output	Phase Jitter (12 k to 20 MHz)	Rise/Fall Time (ps)	Channel Skew (ps)	Disable Mode	Power Supply (V)	Package	ECCN Code	Part Number
4	Clock Divider & Delay Management	LVPECL, LVDS, CML, CMOS	LVPECL	13 fs RMS	90	300 to 1500 Prog.Delay	Yes	5 or 3.3	LP3	3A001.a.11.b	HMC988LP3E
8	1:8+1 Fanout Buffer	LVPECL, LVDS, CML, CMOS	LVPECL	8 fs RMS	65	3.1	Yes	3.3	LP5	3A001.a.11.b	HMC987LP5E

Clock Generators

Max. Frequency (MHz)	Function	Typical Phase Jitter (fsRMS[1])	Phase Noise Floor (dBc/Hz)	Maximum Reference Freq. (MHz)	Typical Power Consumption (W)	Figure of Merit (Frac/Int) (dBc/Hz)	Package	ECCN Code	Part Number
350	Clock Generator with Fractional-N PLL+VCO	75	-165	350	0.86	-227 / -230	LP6G	3A001.a.11.b	HMC1032LP6GE
500	Integer Mode PLL (x1, x5, x10)	Defined by VCXO	Defined by VCXO	140	0.0064	-208	MS8	3A001.a.11.b	HMC1031MS8E
550	High Performance +3.3V Clock Generator	99	-163	350	0.64	-226 / -227	LP6G	3A001.a.11.b	HMC1033LP6GE
2500	High Performance +3.3V Clock Generator	97	-163	350	0.57	-226 / -227	LP6G	3A001.a.11.b	HMC1035LP6GE
3000	Clock Generator with Fractional-N PLL+VCO	78	-165	350	0.86	-227 / -230	LP6G	3A001.a.11.b	HMC1034LP6GE

Extract the Best SNR Performance from Your Data Converters!

- ***HMC1034LP6GE achieves 70 fs Typ. RMS Phase Jitter in Integer Mode***
- ***HMC987LP5E, 1:8 LVPECL Fan-Out Buffer Distributes Data Converter Sample Clocks with Only 8 fs RMS Additive Jitter (12 kHz - 20 MHz)***
- ***HMC988LP3E Clock Divider & Delay Management IC Adjusts Data Converter Sample Clock Windows in 20 ps Resolution and Offers -170 dBc/Hz Phase Noise Floor***

The low phase noise floor of a clock signal as well as its low integrated phase jitter helps to minimize the SNR degradation at high ADC / DAC input frequencies in multi-carrier, multi-acquisition applications. Hittite's Clock & Timing ICs are designed with data converter applications in mind, and are ideal for driving Hittite's High-Speed ADC devices.

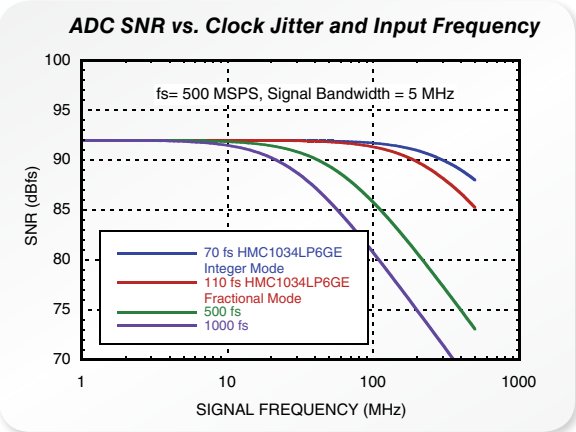

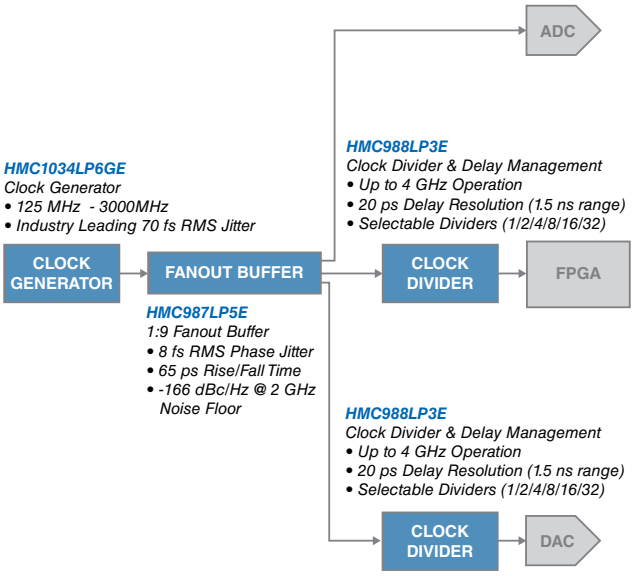

Contact Us: timing@hittite.com

Please note the DC Power Conditioning Table is in the LO Generation ICs Section.

FOR BROADBAND, CELLULAR INFRASTRUCTURE AND FIBER OPTIC & NETWORKING

Features

- ***Low Noise Floor of -166 dBc/Hz Makes the HMC987LP5E Ideal for Clocking High Performance ADC / DAC & SERDES Devices***
- ***HMC1031MS8E Ultra-Low Power Integer Mode PLL Enables Jitter Attenuation with 1.6 mA Typical Current Consumption from a Single 3.3V Supply***
- ***HMC988LP3E Offers Selectable Frequency Division and Clock Delay Management with 20 ps Resolution Up to 1.5 ns Total Delay Range***
- ***<100 fs Integrated Phase Jitter of the HMC1035LPGE Clock Generator Improves Data Converter SNR***

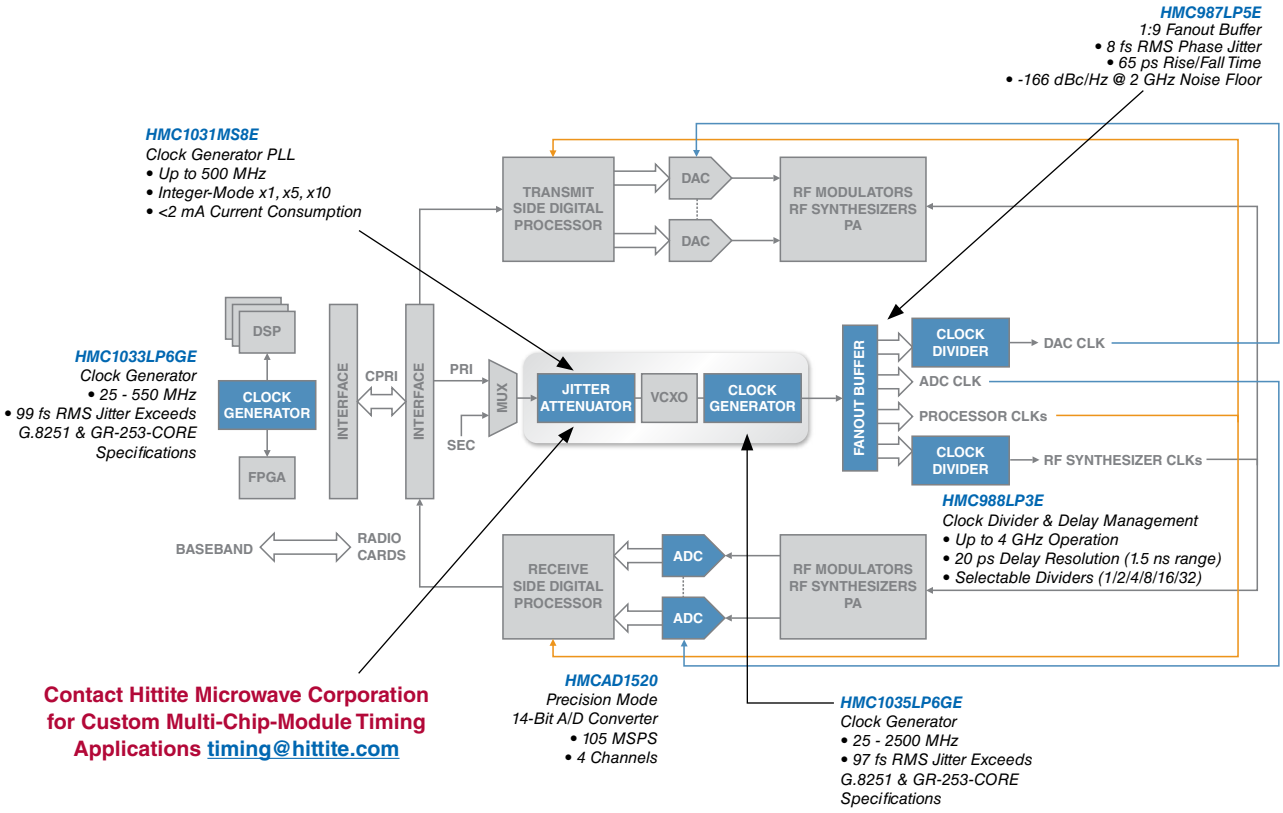

Contact Hittite Microwave Corporation for Custom Multi-Chip-Module Timing Applications timing@hittite.com

Contact Us: timing@hittite.com

Typical Clocks & Timing ICs applications are illustrated.
See the full product listing for alternatives to the select HMC products shown in each functional block.

FOR BROADBAND, CELLULAR INFRASTRUCTURE AND FIBER OPTIC & NETWORKING

Features

- ***<10 fs 12 kHz - 20 MHz integrated Phase Jitter Performance of HMC987LP5E Enables High Performance Clock Distribution with Negligible Jitter Generation***
- ***A Flexible Input Interface Allows the HMC987LP5E LVDS, CML & CMOS Inputs to 8 LVPECL Outputs***
- ***HMC1035LP6GE May be Used for Clock Generation & Fractional Multiplication with Outputs Up to 2500 GHz***
- ***The HMC1035LP6GE Achieves Industry Leading Phase Jitter of 97 fs RMS***

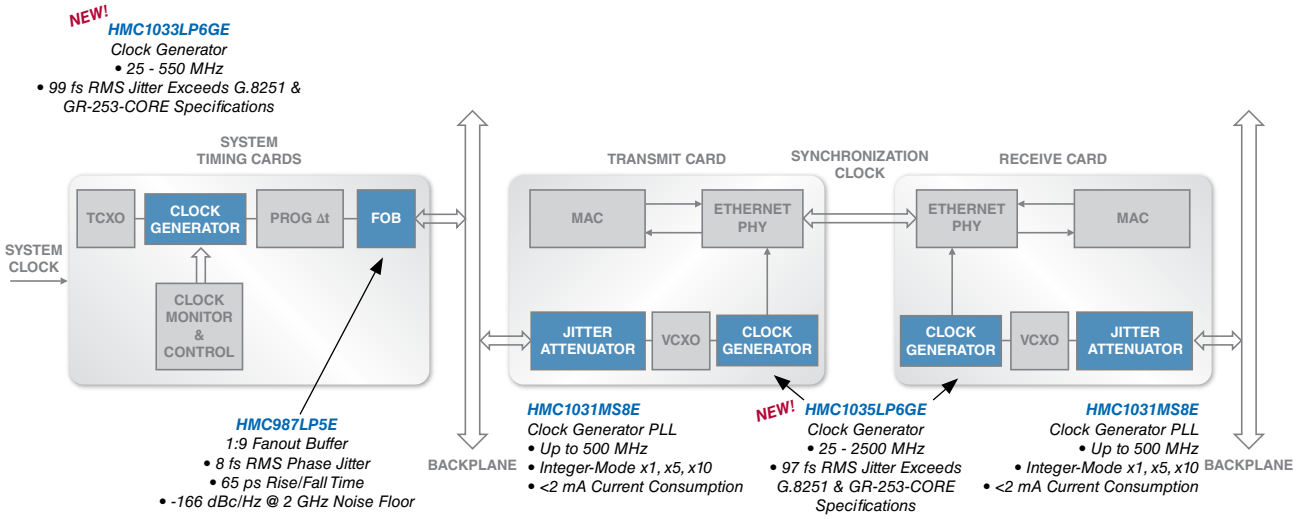

REFERENCE CLOCK SOLUTIONS FOR 100G DP-QPSK

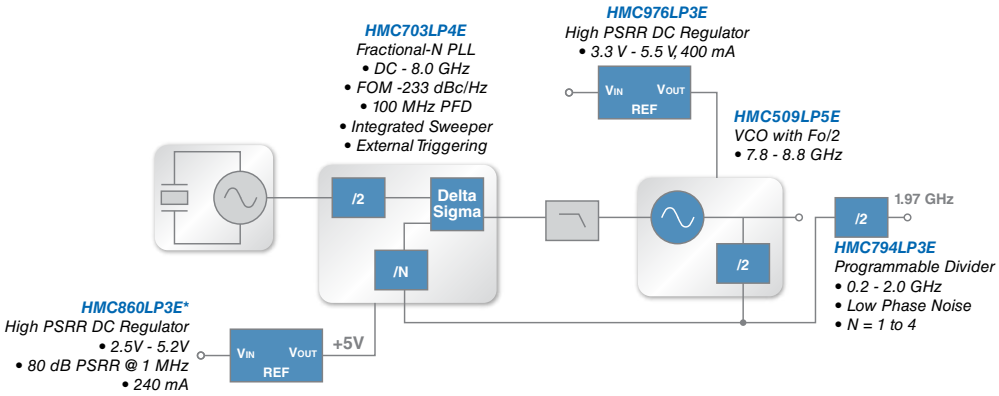

Contact Us: timing@hittite.com

Typical Clocks & Timing ICs applications are illustrated.
See the full product listing for alternatives to the select HMC products shown in each functional block.

SMT & Chip (Die) Products

Frequency Dividers HMC872LP4E, HMC873LP4E & HMC879LP4E

Features

- *Extremely Low Phase Noise: FOM to -240 dBc/Hz*
- *Improved Low Frequency Performance*
- *Robust ESD Protection*
- *HMC872LP4E & HMC873LP4E Offer Built-In Lock Detection & Invert Function*
- *Wide Input Power Range: -10 to +5 dBm*

Typical High Performance Synthesizer Block Diagram

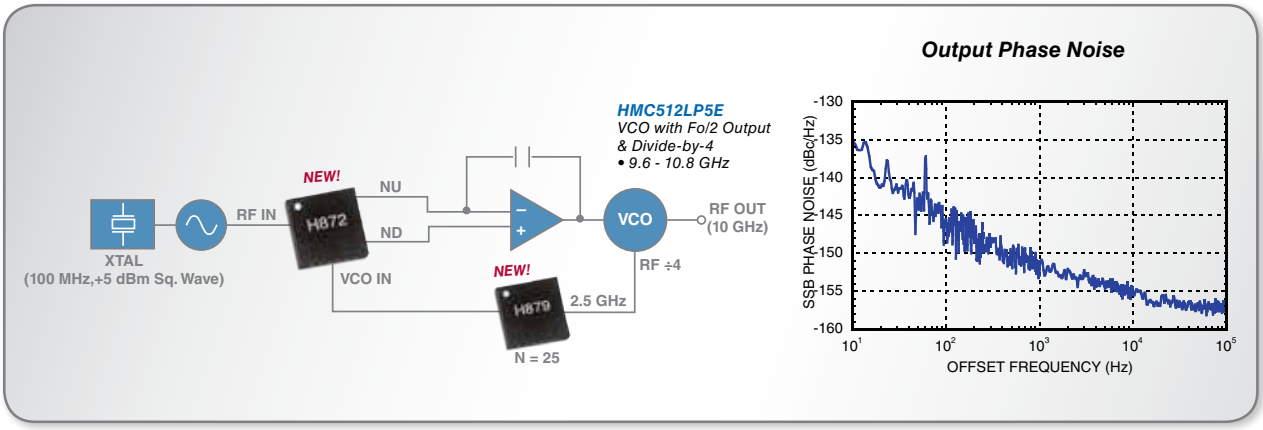

Typical High Performance Synthesizer Block Diagram

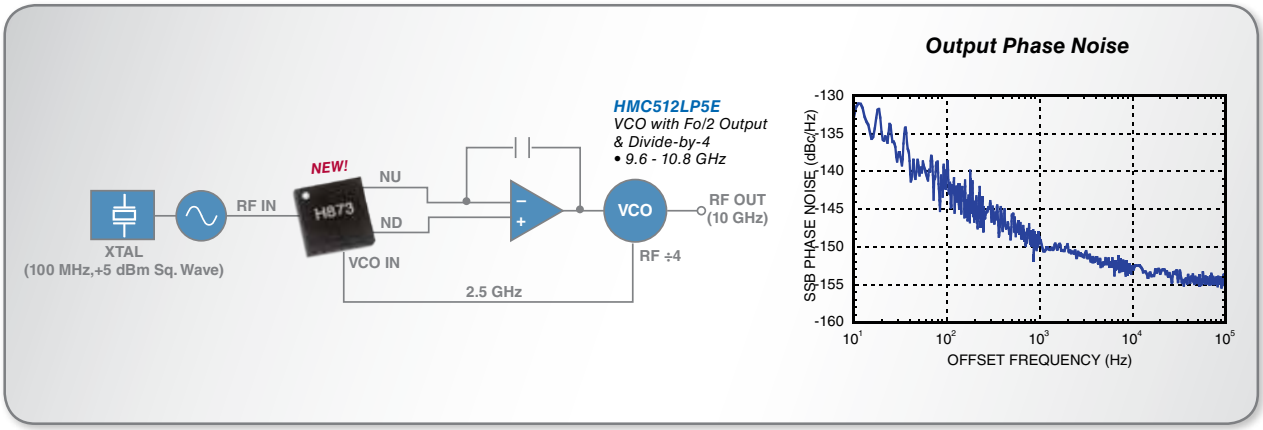

DC POWER CONDITIONING - *Linear Voltage Regulators*

Input Voltage (V)	Function	Output Voltage (V)	Max. Output Current (mA)	Power Supply Rejection Ratio (PSRR) (dB)		Output Noise Spectral Density (nV/√Hz)		Regulated Outputs	Package	ECCN Code	Part Number
				1 kHz	1 MHz	1 kHz	10 kHz				
3.35 - 5.6	Quad High PSRR	2.5 - 5.2	240	80	60	7	3	4	LP3	EAR99	HMC860LP3E
3.35 - 5.6	Low Noise, High PSRR	1.8 - 5.2	500	80	60	7	3	4	LP3	EAR99	HMC1060LP3E
4.8 to 5.6	Low Noise, High PSRR	1.8 to 5.1	400	60	30	6	3	1	LP3	EAR99	HMC976LP3E

FILTERS - *Tunable*

Programmable Harmonic

Frequency Range (GHz)	Function	Return Loss (dB)	3 dB Bandwidth (GHz)	Stopband Frequency (Rej. >10 dB)	Tuning Response (ns)	Package	ECCN Code	Part Number
0.25 - 3.025	Programmable Harmonic Low Pass	10	1 - 3	1.2 Fcutoff	10	LP3	EAR99	HMC1044LP3E

FREQUENCY DIVIDERS *(PRESCALERS)* & DETECTORS

Frequency Dividers & Phase / Frequency Detectors

Input Frequency (GHz)	Function	Input Power (dBm)	Output Power (dBm)	100 kHz SSB Phase Noise (dBc/Hz)	Bias Supply	Package	ECCN Code	Part Number
DC - 8	Divide-by-2	-12 to +12	-6	-148	+3V @ 42 mA	SOT26	3A001.a.11.b	HMC432E
DC - 10	Divide-by-2	-15 to +10	3	-148	+5V @ 83 mA	S8G	3A001.a.11.b	HMC361S8G
DC - 10	Divide-by-2	-15 to +10	3	-148	+5V @ 83 mA	S8G	3A001.a.11.b	HMC361S8GE
DC - 11	Divide-by-2	-15 to +10	3	-148	+5V @ 105 mA	Chip	3A001.a.11.b	HMC361
DC - 13	Divide-by-2	-15 to +10	3	-148	+5V @ 84 mA	G8	3A001.a.11.b	HMC361G8
DC - 18	Divide-by-2	-15 to +10	-4	-150	+5V @ 77 mA	LP3	3A001.a.11.b	HMC492LP3E
DC - 7	Divide-by-3	-12 to +12	-2	-153	+5V @ 69 mA	MS8G	3A001.a.11.b	HMC437MS8GE
DC - 4	Divide-by-4	-15 to +10	3.5	-146	+3V @ 13 mA	MS8	3A001.a.11.b	HMC426MS8E
DC - 8	Divide-by-4	-12 to +12	-3	-150	+3V @ 53 mA	SOT26	3A001.a.11.b	HMC433E
DC - 11	Divide-by-4	-15 to +10	-6	-149	+5V @ 68 mA	Chip	3A001.a.11.b	HMC362
DC - 12	Divide-by-4	-15 to +10	-6	-149	+5V @ 68 mA	S8G	3A001.a.11.b	HMC362S8GE
DC - 13	Divide-by-4	-15 to +10	2	-151	+5V @ 110 mA	Chip	3A001.a.11.b	HMC365
DC - 13	Divide-by-4	-15 to +10	7	-151	+5V @ 120 mA	G8 Hermetic	3A001.a.11.b	HMC365G8
DC - 13	Divide-by-4	-15 to +10	2	-151	+5V @ 110 mA	S8G	3A001.a.11.b	HMC365S8GE
DC - 18	Divide-by-4	-15 to +10	-4	-150	+5V @ 96 mA	LP3	3A001.a.11.b	HMC493LP3E
10 - 26	Divide-by-4	-15 to +10	-4	-150	+5V @ 96 mA	LC3	3A001.a.11.b	HMC447LC3
DC - 7	Divide-by-5	-12 to +12	-1	-153	+5V @ 80 mA	MS8G	3A001.a.11.b	HMC438MS8GE
DC - 8	Divide-by-8	-5 to +12	-2	-150	+3V @ 62 mA	SOT26	3A001.a.11.b	HMC434E
DC - 12	Divide-by-8	-15 to +10	-9	-153	+5V @ 70 mA	Chip	3A001.a.11.b	HMC363
DC - 12	Divide-by-8	-15 to +10	4	-153	+5V @ 90 mA	G8 Hermetic	3A001.a.11.b	HMC363G8
DC - 12	Divide-by-8	-15 to +10	-9	-153	+5V @ 70 mA	S8G	3A001.a.11.b	HMC363S8GE
DC - 18	Divide-by-8	-15 to +10	-4	-150	+5V @ 105 mA	LP3	3A001.a.11.b	HMC494LP3E
0.1 - 6.5	Programmable Divider (N = 1 to 17)	-15 to +10	0	-153	+5V @ 200 mA	LP4	3A001.a.11.b	HMC705LP4E
0.1 - 13.0	Programmable Divider (N = 1, 3)	-10 to +10	2	-152	+5V @ 185 mA	LP3	3A001.a.11.b	HMC861LP3E
0.1 - 15	Programmable Divider (N = 1, 2, 4, 8)	-15 to 10	2	-153	+5V @ 105 mA	LP3	3A001.a.11.b	HMC862LP3E
NEW! 0.01 - 1.5	Phase Frequency Detector w/ Lock Det. & Invert Function	-10 to +5	2 Vp-p	-155	+5V @ 120 mA	LP4	3A001.a.11.b	HMC872LP4E
0.2 - 2.0	Programmable Divider (N = 1 to 4)	-2 to +10	10	-160	+5V @ 135 mA	LP3	3A001.a.11.b	HMC794LP3E
0.4 - 6.0	Programmable Divider (N = 1 to 4)	0 to +9	5	-156	+3.3V @ 100 mA	LP3	3A001.a.11.b	HMC905LP3E
NEW! 0.01 - 3	6-Bit Counter (N = 2 - 64)	-10 to +5	2	-160	+5V @ 200 mA	LP4	3A001.a.11.b	HMC879LP4E
DC - 2.2	5-bit Counter, ÷2 to 32	-15 to +10	4	-153	+5V @ 194 mA	LP4	3A001.a.11.b	HMC394LP4E
0.01 - 1.3	Phase Frequency Detector	-10 to +10	2 Vp-p	-153	+5V @ 96 mA	QS16G	3A001.a.11.b	HMC439QS16GE

Fractional Divider & Frequency Detector

Input Frequency (GHz)	Function	Input Power (dBm)	Output Level (dBm)	Floor FOM (dBc/Hz)	Bias Supply	Package	ECCN Code	Part Number
DC - 7	48-Bit Delta Sigma Programmable Fractional Divider with Sweeper	-15 to -3	0.75 Vp-p to 2 Vp-p into 100 Ohm	-160	+5V @ 1 mA +3V @ 244 mA	LP5	3A001.a.11.b	HMC983LP5E
DC - 0.35	Frequency Detector & Charge Pump	3 to 12	0.02 to 2.5 mA	-231	+5V @ 97 mA +3V @ 27 mA	LP4	EAR99	HMC984LP4E

FREQUENCY MULTIPLIERS - *Active*

Input Frequency (GHz)	Function	Output Frequency (GHz)	Input Power (dBm)	Output Power (dBm)	100 kHz SSB Phase Noise (dBc/Hz)	Package	ECCN Code	Part Number
3 - 4	x2 Active	6 - 9	0	17	-140	LP4	EAR99	HMC575LP4E
4.0 - 10.5	x2 Active	8 - 21	5	17	-139	Chip	EAR99	HMC561
4.0 - 10.5	x2 Active	8 - 21	5	14	-139	LP3	EAR99	HMC561LP3E
4 - 11	x2 Active	8 - 22	5	12	-134	LC3B	EAR99	HMC573LC3B
4.5 - 8.0	x2 Active	9 - 16	2	15	-140	LP4	EAR99	HMC368LP4E
4.95 - 6.35	x2 Active	9.9 - 12.7	0	4	-142	LP3	EAR99	HMC369LP3E

SMT & Chip (Die) Products

FREQUENCY MULTIPLIERS - Active

Input Frequency (GHz)	Function	Output Frequency (GHz)	Input Power (dBm)	Output Power (dBm)	100 kHz SSB Phase Noise (dBc/Hz)	Package	ECCN Code	Part Number
6.5 - 12.3	x2 Active	13.0 - 24.6	4	17	-136	Chip	EAR99	HMC814
6.5 - 12.3	x2 Active	13.0 - 24.6	4	17	-136	LC3B	EAR99	HMC814LC3B
9.0 - 14.5	x2 Active	18 - 29	3	17	-132	Chip	EAR99	HMC576
9.0 - 14.5	x2 Active	18 - 29	3	15	-132	LC3B	EAR99	HMC576LC3B
9.5 - 12.5	x2 Active	19 - 25	0	11	-135	Chip	EAR99	HMC448
10.0 - 12.5	x2 Active	20 - 25	0	11	-135	LC3B	EAR99	HMC448LC3B
11 - 23	x2 Active	22 - 46	5	15	-	Chip	EAR99	HMC598
12.0 - 16.5	x2 Active	24 - 33	3	17	-132	Chip	EAR99	HMC578
12.0 - 16.5	x2 Active	24 - 33	3	15	-132	LC3B	EAR99	HMC578LC3B
12.5 - 15.5	x2 Active	25 - 31	3	21	-	LP4	EAR99	HMC942LP4E
13.5 - 15.5	x2 Active	27 - 31	0	9	-132	LC3B	EAR99	HMC449LC3B
13.5 - 15.5	x2 Active	27 - 31	5	20	-128	LC4B	EAR99	HMC577LC4B
13.5 - 16.5	x2 Active	27 - 33	0	10	-132	Chip	EAR99	HMC449
16 - 23	x2 Active	32 - 46	3	13	-127	Chip	EAR99	HMC579
2.66 - 5.33	x3 Active	8 - 16	5	2	-152	LP3	EAR99	HMC916LP3E
1.5 - 2.5	x4 Active	6 - 10	5	2	-148	LP3	EAR99	HMC917LP3E
2.45 - 2.8	x4 Active	9.8 - 11.2	-15	3	-142	LP4	EAR99	HMC443LP4E
2.85 - 3.3	x4 Active	11.4 - 13.2	-15 to +5	7	-140	LP4	EAR99	HMC695LP4E
3.6 - 4.1	x4 Active	14.4 - 16.4	-15	0	-140	LP4	EAR99	HMC370LP4E
1.2375 - 1.4	x8 Active	9.9 - 11.2	-15	6	-136	LP4	EAR99	HMC444LP4E
0.61875 - 0.6875	x16 Active	9.9 - 11	-15	7	-130	LP4	EAR99	HMC445LP4E

FREQUENCY MULTIPLIERS - Passive

Input Frequency (GHz)	Function	Output Frequency (GHz)	Conversion Loss (dB)	1Fo / 4Fo Isolation (dB)	Input Drive (dBm)	Package	ECCN Code	Part Number
0.85 - 2.0	x2 Passive	1.7 - 4.0	15	45 / 40	10 to 20	MS8	EAR99	HMC187AMS8E
1.25 - 3.0	x2 Passive	2.5 - 6.0	15	45 / 45	10 to 20	MS8	EAR99	HMC188MS8E
1.3 - 4.0	x2 Passive	2.6 - 8.0	15	45 / 40	10 to 20	Chip	EAR99	HMC158
1.3 - 4.0	x2 Passive	2.6 - 8.0	15	45 / 40	10 to 20	C8	EAR99	HMC158C8
2 - 4	x2 Passive	4 - 8	13	34 / 40	10 to 15	MS8	EAR99	HMC189AMS8E
4 - 8	x2 Passive	8 - 16	20	45 / 38	10 to 15	Chip	EAR99	HMC204
4 - 8	x2 Passive	8 - 16	17	41 / 40	10 to 15	C8	EAR99	HMC204C8
4 - 8	x2 Passive	8 - 16	17	42 / 50	10 to 15	MS8G	EAR99	HMC204MS8GE
6 - 12	x2 Passive	12 - 24	17	32 / 32	10 to 15	Chip	EAR99	HMC205
10 - 15	x2 Passive	20 - 30	13	30	+13	Chip	5A991.h	HMC-XDB112
12 - 18	x2 Passive	24 - 36	14	50 / 60	11 to 15	Chip	EAR99	HMC331
24 - 30	x3 Passive	72 - 90	19	-	+13	Chip	5A991.h	HMC-XTB110

PHASE LOCKED LOOP - Fractional-N & Integer-N ICs

Frequency	Function	Max. PFD Frequency	Max. Reference Frequency	Figure of Merit (Frac/Int) (dBc/Hz)	Frequency Resolution w/ 50 MHz Ref.	Bias Supply	Package	ECCN Code	Part Number
10 kHz - 8 GHz	Fractional-N with Sweeper	75 MHz	200 MHz	-221 / -227	3 Hz	+5V @ 37 mA +3.3V @ 90 mA	LP6C	3A001.a.11.b	HMC701LP6CE
10 kHz - 14 GHz	Fractional-N with Sweeper	75 MHz	250 MHz	-221 / -227	6 Hz	+5V @ 37 mA +3.3V @ 136 mA	LP6C	3A001.a.11.b	HMC702LP6CE
100 MHz - 8 GHz	Fractional-N	70 MHz	200 MHz	-221 / -226	3 Hz	+5V @ 7 mA +3.3V @ 95 mA	LP4	3A001.a.11.b	HMC700LP4E
NEW! 0.01 - 3 GHz	Integ-N (2 - 32) PLL	1500 MHz	1500 MHz	-235	50 MHz	+5V @ 290 mA	LP4	3A001.a.11.b	HMC873LP4E
DC - 7	Fractional-N with Sweeper	150 MHz	350 MHz	-228 / -231	177 nHz	+5V @ 97 mA +3V @ 149 mA	LP5 / LP4	3A001.a.11.b	HMC983LP5E* / HMC984LP4E*
DC - 8 GHz	Fractional-N with Sweeper	100 MHz	350 MHz	-230 / -233	3 Hz	+5V @ 6 mA +3.3V @ 52 mA	LP4	3A001.a.11.b	HMC703LP4E
DC - 8 GHz	Fractional-N	100 MHz	350 MHz	-230 / -233	3 Hz	+5V @ 6 mA +3.3V @ 52 mA	LP4	3A001.a.11.b	HMC704LP4E
80 MHz - 7 GHz	Integer-N	1300 MHz	1300 MHz	-233	50 MHz	+5V @ 310 mA	LP5	3A001.a.11.b	HMC698LP5E
160 MHz - 7 GHz	Integer-N	1300 MHz	1300 MHz	-233	50 MHz	+5V @ 310 mA	LP5	3A001.a.11.b	HMC699LP5E
10 MHz - 2.8 GHz	Integer-N	1300 MHz	1300 MHz	-233	50 MHz	+5V @ 250 mA	QS16G	3A001.a.11.b	HMC440QS16GE

*Two parts together comprise one PLL.

PLLs with INTEGRATED VCOs - Microwave & RF PLLs with Integrated VCOs

Frequency (MHz)	Function	Closed Loop SSB Phase Noise @ 10 kHz Offset	Open Loop VCO Phase Noise @ 1 MHz Offset	Pout (dBm)	RMS Jitter Fractional Mode (fs)	Integrated PN Fractional Mode (deg rms)	Package	ECCN Code	Part Number
fo/2									
665 - 825	Tri-Band RF VCO	-118 dBc/Hz	-148 dBc/Hz	11	180	0.05	LP6C	3A001.a.11.b	HMC822LP6CE
795 - 945	Tri-Band RF VCO	-123 dBc/Hz	-148 dBc/Hz	10	180	0.06	LP6C	3A001.a.11.b	HMC838LP6CE
780 - 870	RF VCO	-116 dBc/Hz	-148 dBc/Hz	14	180	0.06	LP6C	3A001.a.11.b	HMC824LP6CE

PLLs with INTEGRATED VCOs - *Microwave & RF PLLs with Integrated VCOs*

Frequency (MHz)	Function	Closed Loop SSB Phase Noise @ 10 kHz Offset	Open Loop VCO Phase Noise @ 1 MHz Offset	Pout (dBm)	RMS Jitter Fractional Mode (fs)	Integrated PN Fractional Mode (deg rms)	Package	ECCN Code	Part Number
860 - 1040	Tri-Band RF VCO	-118 dBc/Hz	-147 dBc/Hz	10	180	0.07	LP6C	3A001.a.11.b	HMC821LP6CE
990 - 1105	RF VCO	-114 dBc/Hz	-146 dBc/Hz	11	180	0.07	LP6C	3A001.a.11.b	HMC826LP6CE
1025 - 1150	Tri-Band RF VCO	-123 dBc/Hz	-147 dBc/Hz	12	180	0.07	LP6C	3A001.a.11.b	HMC837LP6CE
1050 - 1205	Tri-Band RF VCO	-121 dBc/Hz	-146 dBc/Hz	10	180	0.08	LP6C	3A001.a.11.b	HMC839LP6CE
1095 - 1275	Tri-Band RF VCO	-118 dBc/Hz	-147 dBc/Hz	10	180	0.08	LP6C	3A001.a.11.b	HMC820LP6CE
1310 - 1415	Tri-Band RF VCO	-121 dBc/Hz	-145 dBc/Hz	10	180	0.09	LP6C	3A001.a.11.b	HMC840LP6CE
fo									
1285 - 1415	RF VCO	-112 dBc/Hz	-143 dBc/Hz	10	180	0.09	LP6C	3A001.a.11.b	HMC828LP6CE
1330 - 1650	Tri-Band RF VCO	-112 dBc/Hz	-142 dBc/Hz	6.5	180	0.11	LP6C	3A001.a.11.b	HMC822LP6CE
1590 - 1890	Tri-Band RF VCO	-118 dBc/Hz	-143 dBc/Hz	7.5	180	0.12	LP6C	3A001.a.11.b	HMC838LP6CE
1720 - 2080	Tri-Band RF VCO	-112 dBc/Hz	-141 dBc/Hz	6.5	180	0.13	LP6C	3A001.a.11.b	HMC821LP6CE
1815 - 2010	RF VCO	-112 dBc/Hz	-143 dBc/Hz	7.5	180	0.13	LP6C	3A001.a.11.b	HMC831LP6CE
2050 - 2300	Tri-Band RF VCO	-117 dBc/Hz	-141 dBc/Hz	10.5	180	0.15	LP6C	3A001.a.11.b	HMC837LP6CE
2100 - 2410	Tri-Band RF VCO	-115 dBc/Hz	-140 dBc/Hz	7.5	180	0.16	LP6C	3A001.a.11.b	HMC839LP6CE
2190 - 2550	Tri-Band RF VCO	-112 dBc/Hz	-141 dBc/Hz	6.5	180	0.17	LP6C	3A001.a.11.b	HMC820LP6CE
2620 - 2830	Tri-Band RF VCO	-115 dBc/Hz	-139 dBc/Hz	9	180	0.18	LP6C	3A001.a.11.b	HMC840LP6CE
2fo									
2660 - 3300	Tri-Band RF VCO	-106 dBc/Hz	-136 dBc/Hz	-4	180	0.21	LP6C	3A001.a.11.b	HMC822LP6CE
3180 - 3780	Tri-Band RF VCO	-112 dBc/Hz	-135 dBc/Hz	-4	180	0.24	LP6C	3A001.a.11.b	HMC838LP6CE
3365 - 3705	RF VCO	-107 dBc/Hz	-135 dBc/Hz	0	190	0.25	LP6C	3A001.a.11.b	HMC836LP6CE
3440 - 4160	Tri-Band RF VCO	-106 dBc/Hz	-135 dBc/Hz	-4	180	0.27	LP6C	3A001.a.11.b	HMC821LP6CE
4100 - 4600	Tri-Band RF VCO	-111 dBc/Hz	-135 dBc/Hz	-0.5	180	0.30	LP6C	3A001.a.11.b	HMC837LP6CE
4200 - 4820	Tri-Band RF VCO	-108 dBc/Hz	-135 dBc/Hz	-4	180	0.31	LP6C	3A001.a.11.b	HMC839LP6CE
4380 - 5100	Tri-Band RF VCO	-106 dBc/Hz	-135 dBc/Hz	-4	180	0.33	LP6C	3A001.a.11.b	HMC820LP6CE
5240 - 5660	Tri-Band RF VCO	-109 dBc/Hz	-133 dBc/Hz	-3	180	0.37	LP6C	3A001.a.11.b	HMC840LP6CE
7300 - 8200	Microwave PLL+VCO	-101 dBc/Hz	-140 dBc/Hz	15	196	0.58	LP6C	3A001.a.11.b	HMC764LP6CE
7800 - 8800	Microwave PLL+VCO	-101 dBc/Hz	-140 dBc/Hz	13	193	0.61	LP6C	3A001.a.11.b	HMC765LP6CE
8450 - 9550	Microwave PLL+VCO	-107 dBc/Hz	-138 dBc/Hz	12	93	0.30	LP6C	3A001.a.11.b	HMC767LP6CE
9050 - 10150	Microwave PLL+VCO	-106 dBc/Hz	-140 dBc/Hz	12	82	0.28	LP6C	3A001.a.11.b	HMC769LP6CE
9600 - 10800	Microwave PLL+VCO	-106 dBc/Hz	-140 dBc/Hz	9	83	0.31	LP6C	3A001.a.11.b	HMC778LP6CE
11500 - 12500	Microwave PLL+VCO	-99 dBc/Hz	-134 dBc/Hz	10	181	0.81	LP6C	3A001.a.11.b	HMC783LP6CE
12400 - 13400	Microwave PLL+VCO	-98 dBc/Hz	-132 dBc/Hz	8	175	0.84	LP6C	3A001.a.11.b	HMC807LP6CE
Wideband Continuous Tuning									
25 - 3000	Wideband RF VCO	-114 dBc/Hz @ 2 GHz	-141 dBc/Hz @ 2 GHz	6	82 [1]	0.114 @ 2 GHz	LP6G	3A001.a.11.b	HMC830LP6GE
25 - 3000	Wideband PLL+VCO, (+3.3V)	-114 dBc/Hz @2 GHz	-139 dBc/Hz @ 2 GHz	7	82 [1]	0.114 @ 2 GHz	LP6G	3A001.a.11.b	HMC832LP6GE
25 - 6000	Wideband RF VCO	-114 dBc/Hz @ 2 GHz	-135 dBc/Hz @4 GHz	-4	82 [1]	0.22 @ 4 GHz	LP6G	3A001.a.11.b	HMC833LP6GE
33 - 4100	Wideband PLL+VCO	-105 dBc/Hz @ 4 GHz	-133 dBc/Hz @ 4 GHz	7	82 [1]	0.23 @ 4 GHz	LP6G	3A001.a.11.b	HMC835LP6GE
45 - 1050 1400 - 2100 2800 - 4200 Fo	Wideband RF VCO	-108 dBc/Hz @ 4 GHz	-134 dBc/Hz @ 4 GHz	4	82 [1]	0.229 @ 4 GHz	LP6G	3A001.a.11.b	HMC829LP6GE
45 - 1050 1400 - 2100 2800 - 4200 Fo 5600 - 8400	Wideband RF VCO	-108 dBc/Hz @ 4 GHz	-128 dBc/Hz @ 8 GHz	5 2 2 -10	82 [1]	0.46 @ 8 GHz	LP6G	3A001.a.11.b	HMC834LP6GE

[1] RMS Jitter Integration Bandwidth from 12 kHz to 20 MHz

VOLTAGE CONTROLLED OSCILLATORS* - *VCOs with Buffer Amplifiers & Wideband VCOs*

Fo Frequency (GHz)	Function	Fo Output Power (dBm)	10 kHz SSB Phase Noise (dBc/Hz)	100 kHz SSB Phase Noise (dBc/Hz)	Bias Supply	Package	ECCN Code	Part Number
2.05 - 2.25	VCO with Buffer	3.5	-89	-112	+3V @ 35 mA	LP4	EAR99	HMC384LP4E
2.25 - 2.5	VCO with Buffer	4.5	-89	-115	+3V @ 35 mA	LP4	EAR99	HMC385LP4E
2.6 - 2.8	VCO with Buffer	5	-88	-115	+3V @ 35 mA	LP4	EAR99	HMC386LP4E
2.75 - 3.0	VCO with Buffer	4.5	-89	-114	+3V @ 37 mA	LP4	EAR99	HMC416LP4E
3.15 - 3.4	VCO with Buffer	4.9	-88	-113	+3V @ 39 mA	LP4	EAR99	HMC388LP4E
3.35 - 3.55	VCO with Buffer	4.7	-89	-112	+3V @ 41 mA	LP4	EAR99	HMC389LP4E
3.55 - 3.9	VCO with Buffer	4.7	-87	-112	+3V @ 42 mA	LP4	EAR99	HMC390LP4E
3.9 - 4.45	VCO with Buffer	5	-81	-106	+3V @ 30 mA	LP4	EAR99	HMC391LP4E
4.45 - 5.0	VCO with Buffer	4	-79	-105	+3V @ 30 mA	LP4	EAR99	HMC429LP4E
5.0 - 5.5	VCO with Buffer	2	-80	-103	+3V @ 27 mA	LP4	EAR99	HMC430LP4E
5.5 - 6.1	VCO with Buffer	2	-80	-102	+3V @ 27 mA	LP4	EAR99	HMC431LP4E
5.8 - 6.8	VCO with Buffer	10	-82	-105	+3V @ 100 mA	MS8G	EAR99	HMC358MS8GE

Hittite MICROWAVE CORPORATION

SMT & Chip (Die) Products

VOLTAGE CONTROLLED OSCILLATORS* - VCOs with Buffer Amplifiers & Wideband VCOs

Fo Frequency (GHz)	Function	Fo Output Power (dBm)	10 kHz SSB Phase Noise (dBc/Hz)	100 kHz SSB Phase Noise (dBc/Hz)	Bias Supply	Package	ECCN Code	Part Number
6.1 - 6.72	VCO with Buffer	4.5	-73	-101	+3V @ 31 mA	LP4	EAR99	HMC466LP4E
6.8 - 7.4	VCO with Buffer	11	-80	-106	+3V @ 80 mA	LP4	EAR99	HMC505LP4E
7.1 - 7.9	VCO with Buffer	14	-80	-101	+3V @ 85 mA	LP4	EAR99	HMC532LP4E
7.8 - 8.7	VCO with Buffer	14	-80	-103	+3V @ 77 mA	LP4	EAR99	HMC506LP4E
8.6 - 10.2	VCO with ÷4	18	-70	-100	+5V @ 220 mA	LP5	3A001.a.11.b	HMC734LP5E
10.5 - 12.2	VCO with ÷4	17	-75	-100	+5V @ 220 mA	LP5	3A001.a.11.b	HMC735LP5E
13.2 -13.5	VCO with ÷8	-8	-83	-110	+5V @ 230 mA	QS16G	3A001.a.11.b	HMC401QS16GE
14.0 - 15.0	VCO with ÷8	6	-75	-110	+5V @ 260 mA	QS16G	3A001.a.11.b	HMC398QS16GE
23.8 - 24.8	VCO with ÷16	12	-70	-95	+5V @ 220 mA	LP4	3A001.a.11.b	HMC533LP4E
4 - 8	Wideband VCO	5	-75	-100	+5V @ 55 mA	LC4B	EAR99	HMC586LC4B
5 - 10	Wideband VCO	5	-65	-95	+5V @ 55 mA	LC4B	EAR99	HMC587LC4B
6 - 12	Wideband VCO	1	-65	-95	+5V @ 57 mA	LC4B	EAR99	HMC732LC4B
8 - 12.5	Wideband VCO	5	-65	-93	+5V @ 55 mA	LC4B	EAR99	HMC588LC4B
10 - 20	Wideband VCO	3	-60	-90	+5V @ 70 mA	LC4B	EAR99	HMC733LC4B

** HMC VCOs integrate resonator, negative resistance generator and tuning varactor circuits on-chip. No external components are required.*

VOLTAGE CONTROLLED OSCILLATORS WITH Fo/2 OUTPUT

Fo Frequency (GHz)	Fo/2 Frequency (GHz)	Function	Fo Output Power (dBm)	10 kHz SSB Phase Noise (dBc/Hz)	100 kHz SSB Phase Noise (dBc/Hz)	Bias Supply	Package	ECCN Code	Part Number
VCOs with Fo/2									
6.65 - 7.65	3.325 - 3.825	VCO with Fo/2	13	-90	-115	+5V @ 230 mA	LP5	EAR99	HMC507LP5E
7.3 - 8.2	3.65 - 4.1	VCO with Fo/2	15	-90	-116	+5V @ 240 mA	LP5	EAR99	HMC508LP5E
7.8 - 8.8	3.9 - 4.4	VCO with Fo/2	13	-90	-115	+5V @ 250 mA	LP5	EAR99	HMC509LP5E
9.05 - 10.15	4.525 - 5.075	VCO with Fo/2	13	-88	-115	+5V @ 265 mA	LP5	EAR99	HMC511LP5E
14.5 - 15.0	7.25 - 7.5	VCO with Fo/2	9	-80	-105	+4.2V @ 150 mA	LP4	EAR99	HMC736LP4E
14.9 - 15.5	7.45 - 7.75	VCO with Fo/2	9	-80	-105	+4.2V @ 150 mA	LP4	EAR99	HMC737LP4E
VCOs with Fo/2 & ÷4									
8.45 - 9.55	4.225 - 4.775	VCO with Fo/2 & ÷4	13	-92	-116	+5V @ 315 mA	LP5	3A001.a.11.b	HMC510LP5E
9.5 - 10.8	4.75 - 5.4	VCO with Fo/2 & ÷4	11	-85	-110	+5V @ 350 mA	LP5	3A001.a.11.b	HMC530LP5E
9.6 - 10.8	4.8 - 5.4	VCO with Fo/2 & ÷4	9	-85	-111	+5V @ 330 mA	LP5	3A001.a.11.b	HMC512LP5E
10.43 - 11.46	5.215 - 5.73	VCO with Fo/2 & ÷4	7	-85	-110	+3V @ 275 mA	LP5	3A001.a.11.b	HMC513LP5E
10.6 - 11.8	5.3 - 5.9	VCO with Fo/2 & ÷4	11	-82	-110	+5V @ 350 mA	LP5	3A001.a.11.b	HMC534LP5E
11.1 - 12.4	5.55 - 6.2	VCO with Fo/2 & ÷4	9	-83	-110	+5V @ 350 mA	LP5	3A001.a.11.b	HMC582LP5E
11.17 - 12.02	5.585 - 6.01	VCO with Fo/2 & ÷4	7	-87	-110	+3V @ 275 mA	LP5	3A001.a.11.b	HMC514LP5E
11.5 - 12.5	5.75 - 6.25	VCO with Fo/2 & ÷4	10	-83	-110	+5V @ 200 mA	LP5	3A001.a.11.b	HMC515LP5E
11.5 - 12.8	5.75 - 6.4	VCO with Fo/2 & ÷4	11	-80	-110	+5V @ 350 mA	LP5	3A001.a.11.b	HMC583LP5E
12.4 - 13.4	6.2 - 6.7	VCO with Fo/2 & ÷4	8	-83	-110	+5V @ 260 mA	LP5	3A001.a.11.b	HMC529LP5E
12.5 - 13.9	6.25 - 6.95	VCO with Fo/2 & ÷4	10	-81	-110	+5V @ 330 mA	LP5	3A001.a.11.b	HMC584LP5E
13.6 - 14.9	6.8 - 7.45	VCO with Fo/2 & ÷4	7	-82	-110	+5V @ 260 mA	LP5	3A001.a.11.b	HMC531LP5E
14.25 - 15.65	7.125 - 7.825	VCO with Fo/2 & ÷4	9	-80	-107	+5V @ 350 mA	LP5	3A001.a.11.b	HMC632LP5E
VCOs with Fo/2 & ÷16									
20.9 - 23.9	10.45 - 11.95	VCO with Fo/2 & ÷16	9	-65	-95	+5V @ 200 mA	LP4	3A001.a.11.b	HMC738LP4E
23.8 - 26.8	11.9 - 13.4	VCO with Fo/2 & ÷16	8	-64	-93	+5V @ 200 mA	LP4	3A001.a.11.b	HMC739LP4E

PHASE LOCKED OSCILLATOR

Fo Frequency (GHz)	Function	Fo Output Power (dBm)	10 kHz SSB Phase Noise (dBc/Hz)	100 kHz SSB Phase Noise (dBc/Hz)	Bias Supply	Package	ECCN Code	Part Number
14.7 - 15.4	Phase Locked Oscillator	9	-80	-110	+5V @ 340 mA +12V @ 28 mA	LP4	3A001.a.11.b	HMC535LP4E

HITTITE'S HIGH FREQUENCY LO SOURCE ALTERNATIVES

PLL & VCO CHIPSET

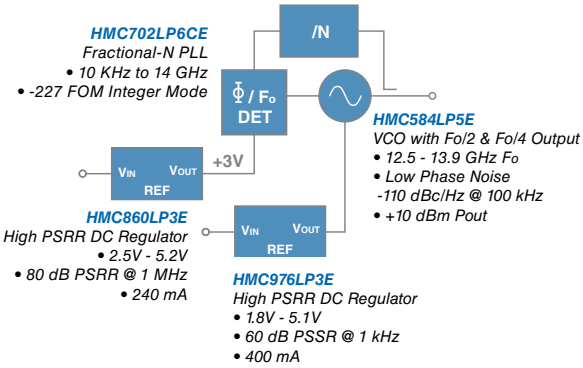

PLL WITH INTEGRATED VCO IC

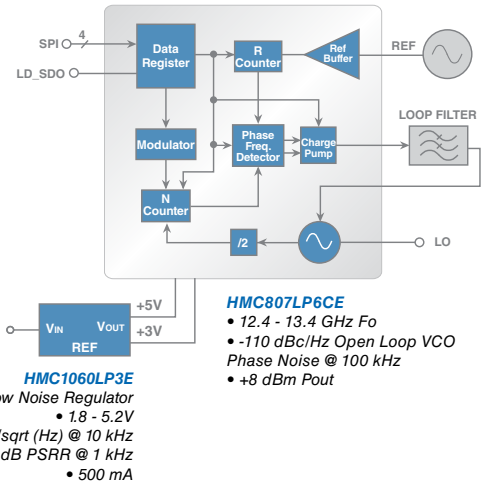

Contact Us: PLL@hittite.com

KA BAND PHASE LOCKED OSCILLATOR FEATURING HITTITE'S DC POWER CONDITIONING & FREQUENCY GENERATION COMPONENTS

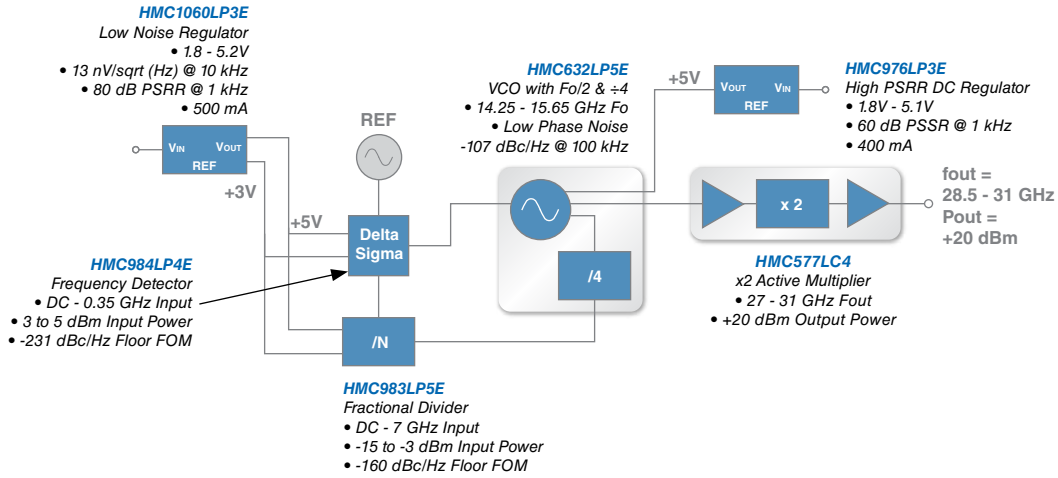

USING HMC1044LP3E AS AN LO HARMONIC FILTER TO IMPROVE MODULATOR/DEMODULATOR SIDEBAND/IMAGE REJECTION

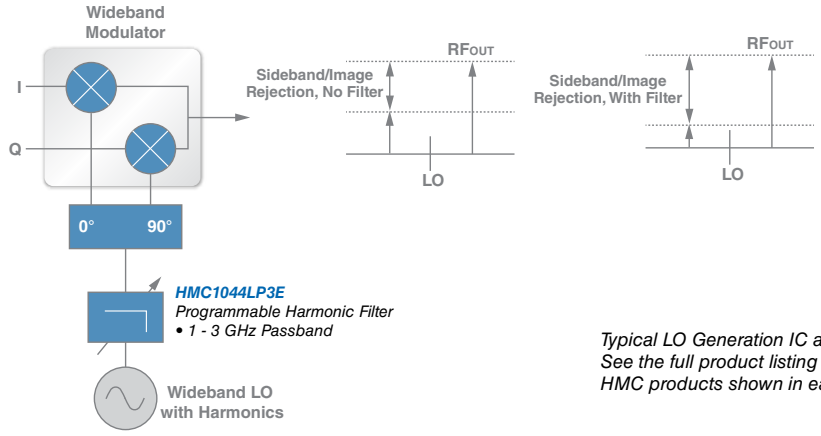

Typical LO Generation IC applications are illustrated. See the full product listing for alternatives to the select HMC products shown in each functional block.

Hittite MICROWAVE CORPORATION

Robust, High Performance RF to Light Solutions

Our hermetic module product line spans a wide range of popular product types including amplifiers, attenuators, DROs, high speed digital logic, frequency multipliers, MicroSynth® integrated synthesizers, mixers, phase shifters, prescalers, SDLVAs, switches & VCOs. Utilizing our standard MMIC products, we take advantage of our world-class design, manufacturing and quality expertise. Hittite can also up-screen modules for high-reliability/military specification applications. Contact us to discuss your custom module requirements.

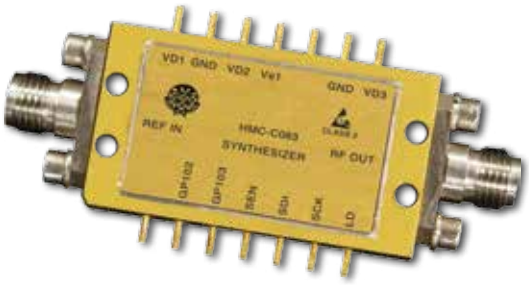

Features:

- *Off-The-Shelf Availability*
- *Hermetically Sealed*
- *Internal DC Power Regulation*
- *Field Replaceable Connectors*
- *Military & Space Upscreening*
- *Customization Offered*

AMPLIFIERS

Frequency (GHz)	Function	Gain (dB)	OIP3 (dBm)	NF (dB)	P1dB (dBm)	Bias Supply	Package / Connector	ECCN Code	Part Number
1 - 12	Low Noise	16	30	1.8	16	+6V @ 60 mA	C-10B / SMA	EAR99	HMC-C059
1.8 - 4.2	Low Noise	26	26	0.7	15.5	+12V @ 112 mA	C-10 / SMA	EAR99	HMC-C045
5 - 9	Low Noise	22.5	25	1.75	15	+12V @ 105 mA	C-10 / SMA	EAR99	HMC-C048
29 - 36	Low Noise	20	22	2.9	11	+3V @ 80 mA	C-10 / 2.92 mm	3A001.b.4.c	HMC-C027
2 - 20	Wideband LNA	15	25	2.5	14	+12V @ 65 mA	C-1 / SMA	EAR99	HMC-C001
2 - 20	Wideband LNA	14	26	2	18	+12V @ 60 mA	C-2 / SMA	EAR99	HMC-C002
2 - 20	Wideband LNA	14	27	2	16	+8V @ 75 mA	C-2B / SMA	EAR99	HMC-C022
7 - 17	Wideband LNA	22	25	2	14	+8V @ 93 mA	C-1 / SMA	EAR99	HMC-C016
17 - 27	Wideband LNA	18	25	3	14	+8V @ 96 mA	C-1B / 2.92 mm	EAR99	HMC-C017
0.01 - 20	Wideband Driver	16	33	3	23	+12V @ 195 mA	C-3 / SMA	3A001.b.4.f	HMC-C004
0.01 - 20	Wideband Driver	15	30	3	23	+12V @ 225 mA	C-3B / SMA	3A001.b.4.f	HMC-C024
2 - 35	Wideband Driver	12	29	3	18	+11V @ 92 mA	C-10 / 2.92 mm	3A001.b.4.c	HMC-C038
0.01 - 6.0	Single Stage Power Amplifier, 1 Watt	13	40	5	29.5	-5V @ 5 mA +15V @ 450 mA	C-17 / SMA	EAR99	HMC-C074
0.01 - 6.0	Two Stage Power Amplifier, 1 Watt	24	42	5	29.5	-5V @ 5 mA +15V @ 740 mA	C-17 / SMA	EAR99	HMC-C075
0.01 - 15	Wideband Power Amplifier, 1/2 Watt	12	36	4	28	+11V @ 360 mA	C-10B / SMA	3A001.b.4.f	HMC-C036
0.01 - 15	Wideband Power Amplifier, 1/2 Watt	12	36	4	28	+11V @ 360 mA	C-12 / SMA	3A001.b.4.f	HMC-C037
2 - 20	Wideband Power Amplifier	15	34	4	26	+12V @ 310 mA	C-2 / SMA	3A001.b.4.f	HMC-C003
2 - 20	Wideband Power Amplifier	15	34	4	26	+12V @ 310 mA	C-2B / SMA	3A001.b.4.f	HMC-C023
2 - 20	Wideband Power Amplifier	31	33	3	26	+12V @ 400 mA	C-3B / SMA	3A001.b.4.f	HMC-C026
17 - 24	Wideband Power Amplifier	22	33	3.5	24	+8V @ 250 mA	C-10 / 2.92 mm	EAR99	HMC-C020
21 - 31	Wideband Power Amplifier	15	32	5	24	+8V @ 215 mA	C-10 / 2.92 mm	3A001.b.4.c	HMC-C021

AMPLIFIERS - *Low Phase Noise*

Frequency (GHz)	Function	Gain / NF (dB)	OIP3 (dBm)	10 kHz Phase Noise (dBc/Hz)	P1dB / Psat (dBm)	Bias Supply	Package / Connector	ECCN Code	Part Number
1.5 - 5.0	Low Phase Noise	14 / 4.5	26.5	-171	17 / 22	+7V @ 170 mA	C-16 / SMA	EAR99	HMC-C077
2 - 18	Low Phase Noise	13.5 / 5	22.5	-160	15 / 18.5	+5V @ 80 mA	C-1 / SMA	EAR99	HMC-C050
3 - 8	Low Phase Noise	9 / 6	33	-168	22 / 25	+7V @ 300 mA	C-16 / SMA	EAR99	HMC-C079
6 - 12	Low Phase Noise	11 / 4.5	34	-176	20 / 22	+7V @ 170 mA	C-16 / SMA	EAR99	HMC-C072
7 - 11	Low Phase Noise	9 / 6	33	-170	22 / 25	+7V @ 300 mA	C-16 / SMA	EAR99	HMC-C076

ATTENUATORS - *Analog & Digital*

Frequency (GHz)	Function	Loss (dB)	Attenuation Range (dB)	IIP3 (dBm)	Control Input (Vdc)	Package / Connector	ECCN Code	Part Number
DC - 20	Analog VVA	5.5	35	10	-5	C-10 / SMA	EAR99	HMC-C053
DC - 13	6-Bit Digital, Serial Control	3.6	0.5 to 31.5	32	Serial/CMOS	C-6 / SMA	EAR99	HMC-C018
DC - 13	6-Bit Digital	3.2	0.5 to 31.5	38	0 / +5V	C-6 / SMA	EAR99	HMC-C025

DIELECTRIC RESONATOR OSCILLATORS (DRO)

Frequency (GHz)	Function	Output Power (dBm)	10 kHz SSB Phase Noise (dBc/Hz)	100 kHz SSB Phase Noise (dBc/Hz)	Frequency Drift (ppm/°C)	Bias Supply	Package	ECCN Code	Part Number
8.0 - 8.3	Dielectric Resonator Oscillator	14.5	-122	-140	2	+6 to +15V @ 125 mA	C-18 / SMA	EAR99	HMC-C200

FREQUENCY DIVIDERS (PRESCALERS)

Input Freq. (GHz)	Function	Input Power (dBm)	Output Power (dBm)	100 kHz SSB Phase Noise (dBc/Hz)	Bias Supply	Package / Connector	ECCN Code	Part Number
DC - 18	Divide-by-2	-15 to +10	-4	-150	+5V @ 75 mA	C-1 / SMA	3A001.a.11.b	HMC-C005
DC - 18	Divide-by-4	-15 to +10	-4	-150	+5V @ 93 mA	C-1 / SMA	3A001.a.11.b	HMC-C006
0.5 - 8	Divide-by-5	-15 to +10	-1	-155	+5V @ 80 mA	C-1 / SMA	3A001.a.11.b	HMC-C039
DC - 18	Divide-by-8	-15 to +10	-4	-150	+5V @ 98 mA	C-1 / SMA	3A001.a.11.b	HMC-C007
0.5 - 17	Divide-by-10	-15 to +10	-1	-155	+5V @ 152 mA	C-1 / SMA	3A001.a.11.b	HMC-C040

FREQUENCY MULTIPLIERS - Active

Input Freq. (GHz)	Function	Output Freq. (GHz)	Input Power (dBm)	Output Power (dBm)	100 kHz SSB Phase Noise (dBc/Hz)	Package / Connector	ECCN Code	Part Number
3 - 5	x2 Active	6 - 10	3	17	-140	C-10 / SMA	EAR99	HMC-C031
9.0 - 14.5	x2 Active	18 - 29	3	16	-132	C-10 / 2.92 mm	EAR99	HMC-C032
12.0 - 16.5	x2 Active	24 - 33	3	17	-132	C-10 / 2.92 mm	EAR99	HMC-C033
16 - 23	x2 Active	32 - 46	3	13	-130	C-10 / 2.92 mm	EAR99	HMC-C034
4.0 - 10.5	x2 Active	8 - 21	6	14	-142	C-10 / SMA	EAR99	HMC-C056

HIGH SPEED DIGITAL LOGIC

Data / Clock Rate (Gbps / GHz)	Function	Rise / Fall Time (ps)	Deterministic Jitter (ps)	Differential Output Swing (Vp-p)	DC Power (mW)	Vee Power Supply (Vdc)	Package / Connector	ECCN Code	Part Number
50 / 30	1:2 Fanout Buffer	9.5 / 11	2	0.5	455	-3.3	C-13 / 1.85 mm	3A001.a.11.b	HMC-C062
50 / 25	AND / NAND / OR / NOR	9 / 10	2	0.5	560	-3.3	C-13 / 1.85 mm	3A001.a.11.b	HMC-C065
43 / 43	D-Type Flip-Flop	9 / 10	1.5	0.5	580	-3.3	C-13 / 1.85 mm	3A001.a.11.b	HMC-C060
50 / 25	D-Type Flip-Flop Double Edge Triggered	9 / 11	1.5	0.5	690	-3.3	C-13 / 1.85 mm	3A001.a.11.b	HMC-C061
50 / 25	XOR / XNOR	6.5 / 10	2	0.5	550	-3.3	C-13 / 1.85 mm	3A001.a.11.b	HMC-C064

I/Q MIXERS

RF / LO Frequency (GHz)	Function	IF Frequency (GHz)	Conversion Gain (dB)	Image Rejection (dB)	IIP3 (dBm)	Package / Connector	ECCN Code	Part Number
4 - 8.5	I/Q Mixer / IRM	DC - 3.5	-7.5	35	23	C-4 / SMA	EAR99	HMC-C009
6 - 10	I/Q Mixer / IRM	DC - 3.5	-7.5	35	25	C-4 / SMA	EAR99	HMC-C041
8.5 - 13.5	I/Q Mixer / IRM	DC - 2	-8	28	25	C-4 / SMA	EAR99	HMC-C042
11 - 16	I/Q Mixer / IRM	DC - 3.5	-9	30	28	C-4 / SMA	EAR99	HMC-C043
15 - 23	I/Q Mixer / IRM	DC - 3.5	-8	30	25	C-4 / 2.92 mm & SMA	EAR99	HMC-C044
20 - 31	I/Q Mixer / IRM	DC - 4.5	-10	24	22.5	C-4B / 2.92 mm & SMA	EAR99	HMC-C046
30 - 38	I/Q Mixer / IRM	DC - 3.5	-10.5	15	19	C-4 / 2.92 mm & SMA	EAR99	HMC-C047

MIXERS

RF Frequency (GHz)	Function	IF Frequency (GHz)	Conversion Gain (dB)	LO/RF Isolation (dB)	IIP3 (dBm)	Package / Connector	ECCN Code	Part Number
7 - 14	+13 LO, DBL-BAL	DC - 5	-7	48	20	C-11 / SMA	EAR99	HMC-C049
11 - 20	+13 LO, DBL-BAL	DC - 6	-7	43	18	C-11 / 2.92 mm & SMA	EAR99	HMC-C051
16 - 32	+13 LO, DBL-BAL	DC - 8	-8	35	19	C-11 / 2.92 mm & SMA	EAR99	HMC-C014
23 - 37	+13 LO, DBL-BAL	DC - 13	-9	35	19	C-11 / 2.92 mm & SMA	EAR99	HMC-C035
24 - 38	+13 LO, DBL-BAL	DC - 8	-8.5	35	20	C-11 / 2.92 mm & SMA	EAR99	HMC-C015

PHASE SHIFTERS - Analog

Frequency (GHz)	Function	Insertion Loss (dB)	Phase Range (deg)	2nd harmonic Pin = 10 dBm (dBc)	Control Voltage Range (Vdc)	Package / Connector	ECCN Code	Part Number
6 - 15	Analog	7	750° @ 6 GHz 450° @ 15 GHz	40	0V to +5V	C-1 / SMA	EAR99	HMC-C010

PHASE SHIFTERS - Digital

Frequency (GHz)	Function	Insertion Loss (dB)	Phase Range (deg)	IIP3 (dBm)	Control Voltage Range (Vdc)	Package / Connector	ECCN Code	Part Number
8 - 12	4-Bit Digital	7	22.5 to 360	38	0V to +5V	C-6 / SMA	EAR99	HMC-C055

SDLVAs - Successive Detection Log Video Amplifier

Frequency (GHz)	Function	Dynamic Range (dB)	RSSI Slope (mV / dB)	RF Threshold Level (dBm)	Bias Supply	Package / Connector	ECCN Code	Part Number
NEW! 1 - 20	SDLVA	59	14	-54	+7V to +16V @ 86 mA	C-10	EAR99	HMC-C088
2 - 20	SDLVA with Limited RF Output	50	45	-45	+12V @ 370 mA -5V @ 20 mA	C-21 / SMA	EAR99	HMC-C078

Hittite MICROWAVE CORPORATION

Robust, High Performance RF to Light Solutions

SWITCHES - SPST, SPDT & SP4T

Frequency (GHz)	Function	Insertion Loss (dB)	Isolation (dB)	Input P1dB (dBm)	Switching Speed (ns)	Package / Connector	ECCN Code	Part Number
DC - 20	SPST, Hi Isolation	3	100	23	8.5	C-9 / SMA	EAR99	HMC-C019
DC - 18	SPDT, Hi Isolation	2	55	27	3	C-14 / SMA	EAR99	HMC-C058
DC - 20	SPDT, Hi Isolation	2	40	23	5	C-5 / SMA	EAR99	HMC-C011
DC - 20	SP4T, Hi Isolation	3	40	24	14	C-15 / SMA	EAR99	HMC-C071

SYNTHESIZED MODULES - MicroSynth®

Frequency (GHz)	Function	Min. Step Size Resolution (Hz)	Reference Frequency (MHz)	SSB Phase Noise @ 100 kHz Offset (dBc/Hz)	Output Power (dBm)	Bias Supply	Package	ECCN Code	Part Number
2 - 6	MicroSynth® Synthesizer	0.6	10	-93	17	+20V @ 7 mA +6V @ 330 mA	C-20 / SMA	EAR99	HMC-C083
5.5 - 10.5	MicroSynth® Synthesizer	1.2	10	-92	21	+20V @ 20 mA +6V @ 300 mA +3.6V @ 100 mA	C-20 / SMA	EAR99	HMC-C070

VOLTAGE CONTROLLED OSCILLATORS

Frequency (GHz)	Function	Output Power (dBm)	10 kHz SSB Phase Noise (dBc/Hz)	100 kHz SSB Phase Noise (dBc/Hz)	Bias Supply	Package / Connector	ECCN Code	Part Number
4 - 8	Wideband VCO	20	-75	-95	+12V @ 185 mA	C-1 / SMA	EAR99	HMC-C028
5 - 10	Wideband VCO	20	-64	-93	+12V @ 195 mA	C-1 / SMA	EAR99	HMC-C029
8 - 12.5	Wideband VCO	21	-59	-83	+12V @ 195 mA	C-1 / SMA	EAR99	HMC-C030
38.4 - 43.2	VCO	13	-74	-98	+5V @ 350 mA	C-19 / 2.4 mm	EAR99	HMC-C073

Hittite Microwave Can Offer Any Of Our Die Or SMT IC Products In A Connectorized Module. Full Specifications for Each Product Are Available at www.hittite.com.

MILITARY RADAR RECEIVER SOLUTION

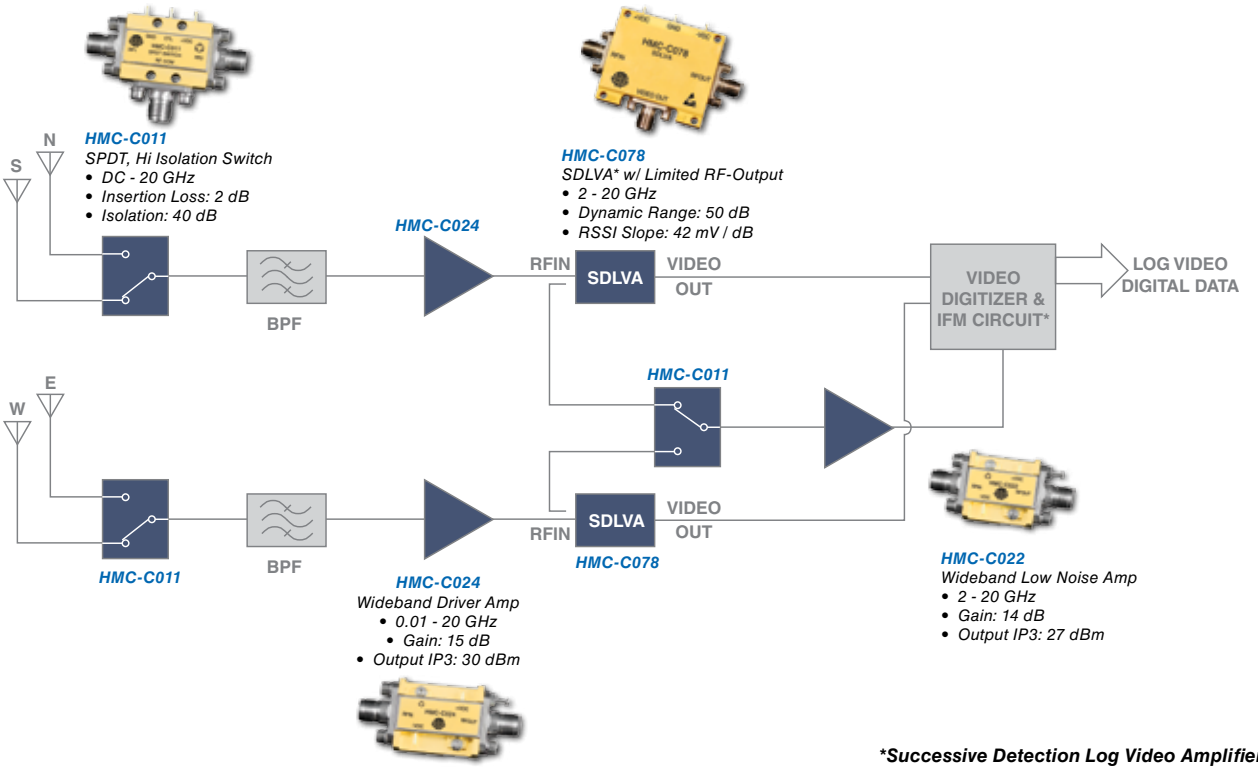

Successive Detection Log Video Amplifier

Ultra Low Noise Phase Locked Oscillator (PLO), Test Equipment Solution

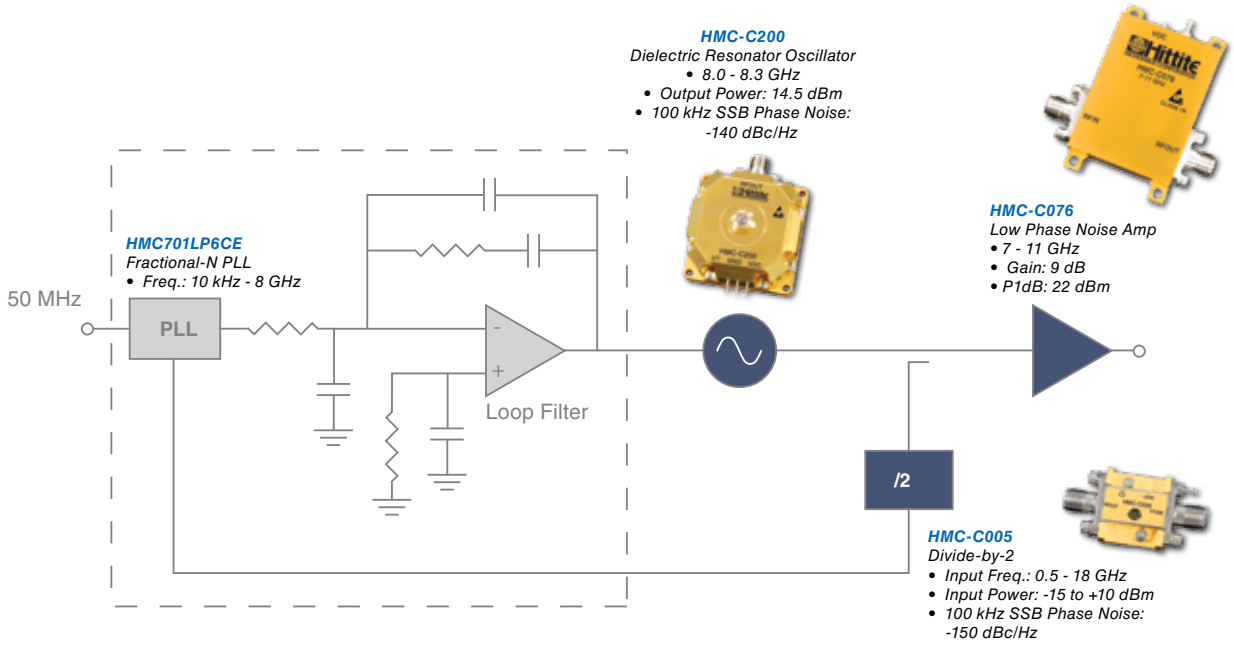

X-Band Miltary Downconverter Solution

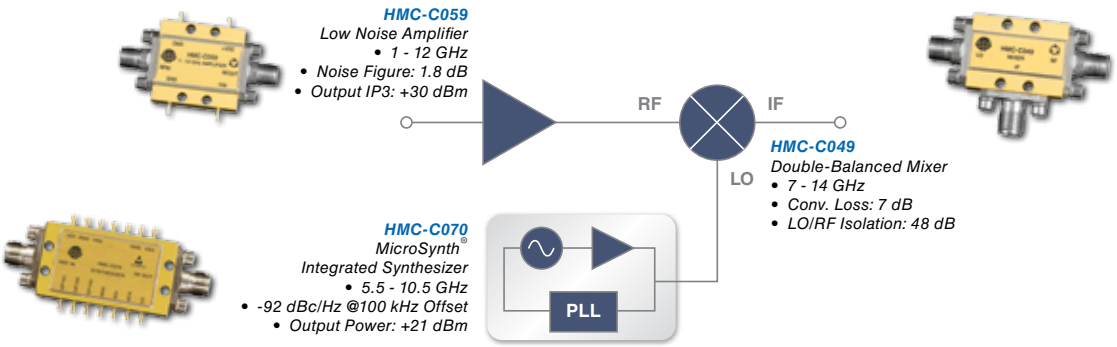

Pulsed 0.5W C-Band Miltary & Test Equipment Synthesizer Solution

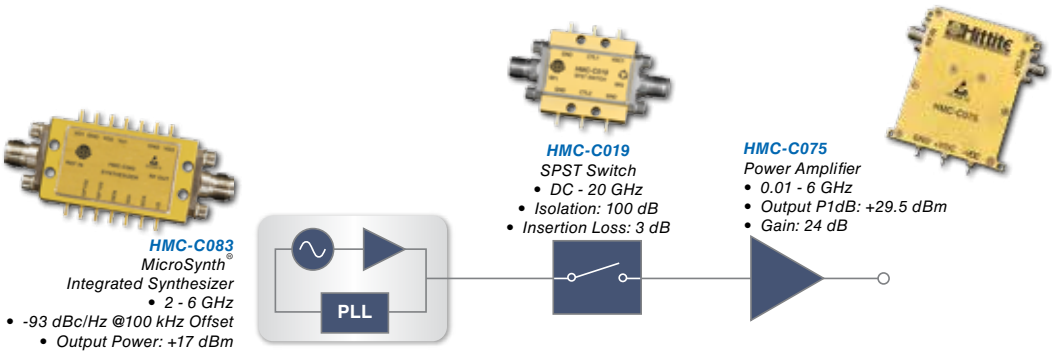

Hittite MICROWAVE CORPORATION

Signal Generator Family to 70 GHz

HMC-T2000
700 MHz to 8 GHz

HMC-T2100
10 MHz to 20 GHz

HMC-T2220B
10 MHz to 20 GHz
Battery Powered

Our Signal Generator Products

- ***Wide Frequency Range:*** *10 MHz to 70 GHz*
- ***Versatile:*** *High Output Power Simplifies Test Set-Ups*
- ***Efficient:*** *Fast Frequency Switching Below 500 µs*
- ***Flexible:*** *Manual or USB / GPIB / Ethernet Control*

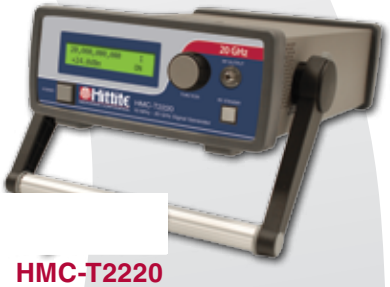

HMC-T2220
10 MHz to 20 GHz

Visit Us at www.tm-hittite.com!

HMC-T2240
10 MHz to 40 GHz

Performance

- ***High Output Power: +20 dBm @ 40 GHz***
- ***Excellent 10 GHz SSB Phase Noise: -98 dBc/Hz @ 10 kHz Offset***
- ***Spurious: < -65 dBc @ 10 GHz***
- ***Resolution: 0.1 dB & 1 Hz***
- ***Fast Switching: 500 µs***

HMC-T2270
10 MHz to 70 GHz

Performance

- ***Output Power: +3dBm @ 70 GHz***
- ***Excellent 70 GHz SSB Phase Noise: -79 dBc/Hz @ 10 kHz Offset***
- ***Spurious: < -65 dBc @ 10 GHz***
- ***Resolution: 0.1 dB & 1 Hz***
- ***Fast Switching: 500 µs***

SIGNAL GENERATORS - *Precise RF Signal Generation for ATE & Lab Environments*

Frequency (GHz)	Function	Frequency Resolution	Maximum Power Output (dBm)	100 kHz SSB Phase Noise (dBc/Hz)	Spurious (dBc)	Switching Speed Steps (µs)	Package	ECCN Code	Part Number
0.7 - 8.0	Signal Generator	1 MHz	+17 @ 1 GHz +10 @ 8 GHz	-87 @ 4 GHz	< -45	200	Rack Mountable / Benchtop	EAR99	**HMC-T2000**
0.01 - 20	Signal Generator	10 kHz	+25 @ 1 GHz +22 @ 20 GHz	-93 @ 10 GHz	< -27	300	Rack Mountable / Benchtop	EAR99	**HMC-T2100**
0.01 - 20	Portable Signal Generator	1 Hz	+28 @ 1 GHz +24 @ 20 GHz	-99 @ 10 GHz	< -57	300	Portable / Benchtop	EAR99	**HMC-T2220B**
0.01 - 20	Signal Generator	1 Hz	+28 @ 1 GHz +24 @ 20 GHz	-99 @ 10 GHz	< -57	300	Rack Mountable / Benchtop	EAR99	**HMC-T2220**
0.01 - 40	Signal Generator	1 Hz	+30 @ 1 GHz +20 @ 40 GHz	-99 @ 10 GHz	< -52	500	Rack Mountable / Benchtop	EAR99	**HMC-T2240**
0.01 - 70	Signal Generator	1 Hz	+29 @ 1 GHz +3 @ 70 GHz	-118 @ 1 GHz -79 @ 70 GHz	< -46	500	Rack Mountable / Benchtop	3A002.d.3.f	**HMC-T2270**

Two Tone Third Order Intercept Test Set-up

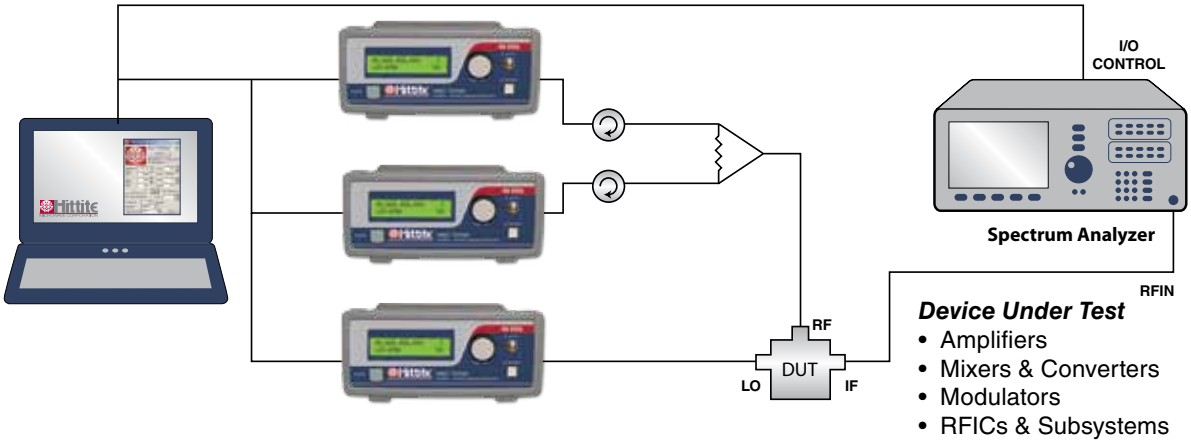

Efficient Mixer Conversion Loss, Isolation & MxN Spurious Test Set-up

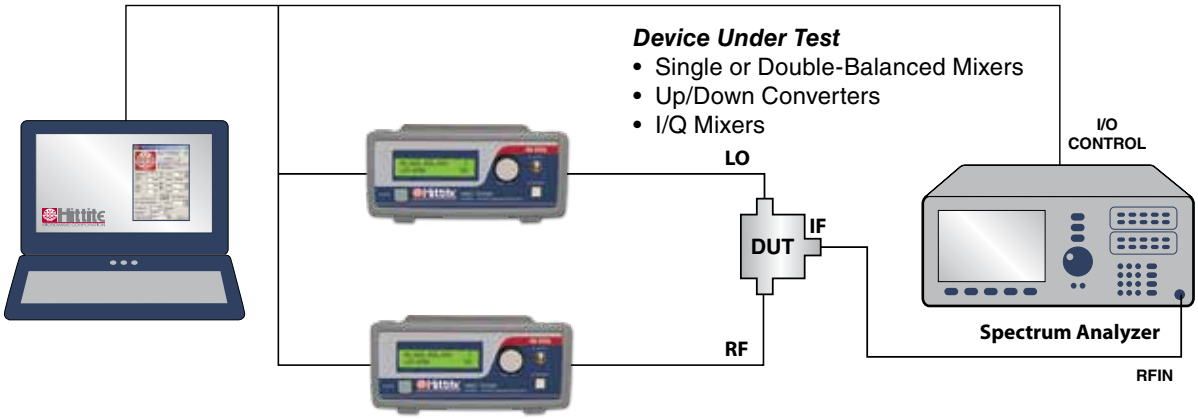

Contact Us Today with Your Custom Test Instrumentation Requirements at TE@hittite.com!

Visit our Instrumentation Web Site at www.tm-hittite.com.

Military & Space Screening

Hittite MICROWAVE CORPORATION

High Reliability Solutions for Land, Sea, Air & Space

Military Commercial/Industrial Components, and Assemblies

- Class B screening on standard & custom product die and SMT packaging.
- Design, production & screening of highly integrated MIC sub-assemblies for major defense OEMs.
- Military & Space Upscreening to Customer Specifications.

Military Solution Inquiries: MIL@hittite.com

Class B Screening & Qualification

- ***VI to Method 2010B & 2017H***
- ***Bond Pull & Die Shear Test***
- ***Solderability Test***
- ***High Temp Burn-In Test***
- ***Vibration Stress Test***
- ***Temp Cycle Stress Test***
- ***Constant Acceleration Stress Test***
- ***Fine & Gross Hermeticity Test***
- ***Serialized Test Data***
- ***ESD Characterization***

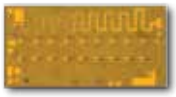

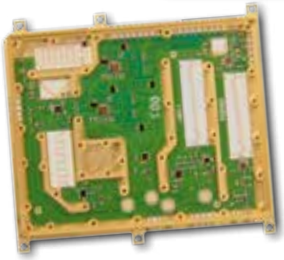

Space Qualified Components, Modules & Subsystems

Class S Screening & Qualification

- ***VI to Methods 2010A & 2017K***
- ***Temp Cycle Stress Test***
- ***High Temp Burn-In & Life Test***
- ***Wafer Lot Acceptance Test***
  - ***Bond Pull & Die Shear Test***
  - ***SEM Inspection***
  - ***Metal & Glass Thicknesses***
- ***Serialized Test Data***
- ***Qualification Report***

- Class S screening on standard & custom product die and SMT packaging.
- Military & Space Upscreening to Customer Specifications.
- Qualified by major spacecraft OEMs worldwide.
- Over 45,000 S-Level components currently operational on dozens of commercial, scientific & military spacecraft.

Space Solution Inquiries: SPACE@hittite.com

FET Channel SEM

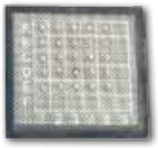
Serialized Die in GEL-PAK

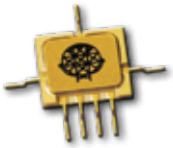
Hermetic SMT Package

Hermetic Modules

Chip (Die)

Contact Us Today With Your High Reliability Mixed-Signal RF, Microwave & Millimeterwave Requirements!

Evaluation Boards & ICs Reduce Design Cycle Time

8 DESIGNER'S KITS AVAILABLE TO CHOOSE FROM!

- ***Gain Blocks DC - 6 GHz, HMC-DK001***
- ***Linear Driver Amplifiers 0.4 - 2.5 GHz, HMC-DK002***
- ***High IP3 Mixers 0.45 - 4.0 GHz, HMC-DK003***
- ***Digital Attenuators DC - 6 GHz, HMC-DK004***
- ***SPDT Switches DC - 12 GHz, HMC-DK005***
- ***Passive Attenuator Chips DC - 50 GHz, HMC-DK006***
- ***Serial/Parallel USB Interface Kit, HMC-DK008***

Design engineers can order pre-packaged MMIC Designer's Kits which enable them to quickly assess which Hittite product is the best choice for their application. The end result is a design that goes to layout more quickly and with fewer subsequent changes.

Each Hittite Designer's Kit contains an assembled & tested connectorized evaluation board, 5 to 10 ICs of each part and the latest Hittite CD-ROM catalog.

Designer's Kit	Kit Contents			
	ICs		Eval Boards	
Gain Blocks DC - 6 GHz HMC-DK001	HMC474MP86E HMC476MP86E HMC313E HMC311ST89E HMC478MP86E HMC478ST89E	HMC479MP86E HMC479ST89E HMC481ST89E HMC480ST89E HMC481MP86E HMC482ST89E	104217 – HMC313E 110161 – HMC478ST89E 107490 – HMC481MP86E	
Linear Driver Amps 0.4 - 2.5 GHz HMC-DK002	HMC454ST89E HMC450QS16GE HMC413QS16GE	HMC452ST89E HMC453ST89E HMC457QS16GE	107749 – HMC454ST89E 108349 – HMC450QS16GE 105000 – HMC413QS16GE	108712 – HMC452ST89E 108718 – HMC453ST89E 106043 – HMC457QS16GE
Hi-IP3 Mixers 0.45 - 4.0 GHz HMC-DK003	HMC387MS8E HMC483MS8GE HMC399MS8E HMC316MS8E HMC400MS8E HMC485MS8GE	HMC402MS8E HMC214MS8E HMC478ST89E HMC481ST89E HMC480ST89E	110161 – HMC478ST89E 105188 – HMC485MS8GE	106334 – HMC399MS8E 101830 – HMC400MS8E
Digital Attenuators DC - 6 GHz HMC-DK004	HMC291E HMC468LP3E HMC274QS16E HMC271ALP4E HMC273MS10GE	HMC305ALP4E HMC306MS10E HMC470LP3E HMC472LP4E	103372 – HMC291E 107302 – HMC468LP3E 104976 – HMC274QS16E 108782 – HMC271ALP4E 103393 – HMC273MS10GE	108782 – HMC305AMS10E 103393 – HMC306MS10E 107006 – HMC470LP3E 107010 – HMC472LP4E
SPDT Switches DC - 12 GHz HMC-DK005	HMC221AE HMC284MS8GE HMC349MS8GE HMC232LP4E HMC544E	HMC595E HMC574MS8E HMC784MS8GE HMC536MS8GE	101675 – HMC221AE 107662 – HMC349MS8GE 107723 – HMC232LP4E	104124 – HMC574MS8E 104124 – HMC784MS8GE 105143 – HMC536MS8GE
Passive Attenuators DC - 50 GHz HMC-DK006	HMC650 HMC651 HMC652 HMC653 HMC654	HMC655 HMC656 HMC657 HMC658		
Serial/Parallel USB Interface Kit HMC-DK008	The HMC-DK008 Serial/Parallel Interface Designer's kit enables users to interface with Hittite's family of digital attenuators, interface and variable gain amplifiers.			
EKIT01-HMC6383	Programmable Direct Conversion Receiver, 700 to 3000 MHz. Hittite's HMC6383 features unparalleled receiver flexibility and industry leading performance			
EKIT01-HMC6450 60 GHz TX/RX Evaluation Kit.	Use with either HMC6000LP711E (Transmitter with Integrated Antenna) or HMC6001LP711E (Receiver with Integrated Antenna).			
EKIT01-HMC9000 Multi-GHz Quantizer	High Speed Data Aquisition for use with either HMC6804LP4B (T/H Amplifier) or HMCAD8101 (Analog to Digital).			

Package Information

Available Plastic, Ceramic, Hermetic SMT & Connectorized Module Packages

E 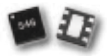	E 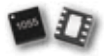	E 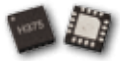	E 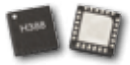	E 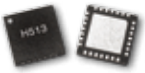	E
LP2 "DFN"	LP2C "DFN"	LP3 / LP3B / LP3D "QFN"	LP4 / LP4B / LP4C "QFN"	LP5 / LP5D "QFN"	LP6 / LP6C / LP6G "QFN"
2.0 x 2.0 x 1.0 mm	2.0 x 2.0 x 1.0 mm	3.0 x 3.0 x 1.0 mm	4.0 x 4.0 x 1.0 mm	5.0 x 5.0 x 1.0 mm	6.0 x 6.0 x 1.0 mm
E	E	E	E 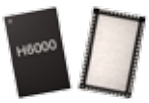	E	E
LP6H "QFN"	LP7 / LP7D / LP7F "QFN"	LP9 "QFN"	LP711 "QFN"	MP86 "Micro-P"	MS8 / MS8G
6.0 x 6.0 x 1.0 mm	7.0 x 7.0 x 1.0 mm	9.0 x 9.0 x 1.0 mm	9.0 x 9.0 x 1.0 mm	5.21 x 5.08 x 1.57 mm	4.9 x 3.0 x 1.0 mm
E	E	E	E	E	E
MS10 / MS10G	QS16 / QS16G	QS24	S8 / S8G	S14	SC70
4.9 x 3.0 x 1.0 mm	6.0 x 4.9 x 1.5 mm	6.0 x 8.7 x 1.6 mm	6.0 x 4.9 x 1.6 mm	6.0 x 8.7 x 1.6 mm	2.15 x 2.1 x 0.9 mm
E	E	✓	✓	✓ 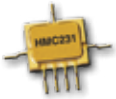	✓
SOT26	ST89	BGA	C8	G7 Hermetic	G8 Hermetic
2.8 x 2.9 x 1.2 mm	4.50 x 4.14 x 1.54 mm	See Product Outlines for Sizes	7.4 x 5.1 x 2.4 mm	16.1 x 17.3 x 1.7 mm	10.2 x 4.6 x 1.8 mm
✓	✓	✓	✓ 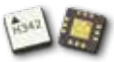	✓	✓
G16 Hermetic	G32 Hermetic	F10	LC3 / LC3B / LC3C	LC4 / LC4B	LC5 / LC5A
10.4 x 10.4 x 1.7 mm	16 x 16 x 1.96 mm	10 Lead Flange Mount	3.0 x 3.0 x 1.0 / 1.45 mm	4.0 x 4.0 x 1.0 / 1.2 mm	5.0 x 5.0 x 1.0 mm
✓	✓	✓	✓	✓	✓
LH5 Hermetic	LH250 Hermetic	LM1 / LM3	LS6	C-1 / C-1B	C-2 / C-2B
5.0 x 5.0 x 1.0 mm	6.35 x 6.35 x 1.27 mm	5.1 x 5.1 x 1.1 mm	6 x 6 x 1.1 mm	35.31 x 17.78 x 7.38 mm	38.1 x 17.78 x 7.38 mm
✓	✓ 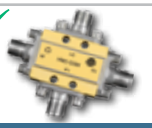	✓	✓	✓ 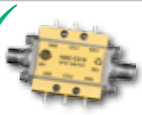	✓ 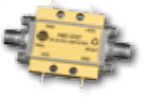
C-3 / C-3B	C-4	C-5	C-6	C-9	C-10 / C-10B
40.89 x 17.78 x 7.38 mm	41.66 x 36.32 x 8.50 mm	41.66 x 26.8 x 8.79 mm	45.34 x 17.27 x 8.50 mm	44.45 x 21.59 x 8.76 mm	46.63 x 21.59 x 8.50 mm
✓ 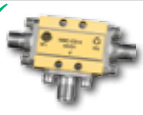	✓ 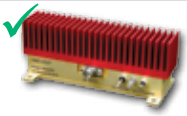	✓ 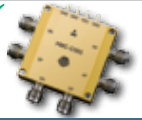	✓	✓	✓
C-11	C-12	C-13	C-14	C-15	C-16
41.66 x 26.8 x 8.64 mm	107.6 x 43.0 x 43.0 mm	39.43 x 47.12 x 11.42 mm	41.91 x 29.85 x 9.65 mm	59.69 mm DIA x 9.14 mm	48.0 x 48.26 x 14.10 mm
✓	✓	✓	✓ 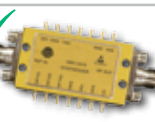	✓	
C-17	C-18	C-19	C-20	C-21	
68.5 x 66.0 x 14.2 mm	38.10 x 47.62 x 26.67 mm	27.31 x 25.15 x 5.84 mm	53.59 x 19.05 x 6.22 mm	38.10 x 33.53 x 5.84 mm	

E or ✓ = RoHS Compliant.

For more information on our "Green" component program, please contact earthfriendly@hittite.com for details on our RoHS Compliant products or see the RoHS Compliant Components link on our web site.

Part Number Index

Part #	Page#
Table Of Contents	
EKIT01-HMC6383	50
EKIT01-HMC6450	50
EKIT01-HMC9000	28, 50
HMC128	16
HMC128G8	16
HMC129	16
HMC129G8	16
HMC129LC4	16
HMC130	16
HMC135	16
HMC136	16
HMC137	16
HMC141 / 142	16
HMC141C8 / 142C8	16
HMC141LH5	16
HMC143 / 144	16
HMC144LC4	16
HMC144LH5	16
HMC158	39
HMC158C8	39
HMC168C8	15
HMC170C8	15
HMC171C8	15
HMC174MS8E	19
HMC175MS8E	15
HMC182S14E	19
HMC183QS24E	19
HMC187AMS8E	39
HMC188MS8E	39
HMC189AMS8E	39
HMC190AMS8E	18
HMC194MS8E	18
HMC197AE	18
HMC199MS8E	19
HMC203	16
HMC204	39
HMC204C8	39
HMC204MS8GE	39
HMC205	39
HMC207AMS8E	15
HMC207AS8E	15
HMC208AMS8E	15
HMC213AMS8E	15
HMC214MS8E	14
HMC215LP4E	14
HMC219AMS8E	15
HMC220AMS8E	15
HMC221AE	18
HMC230MS8E	11
HMC231G7	18
HMC232	18
HMC232C8	18
HMC232G7	18
HMC232G8	18
HMC232LP4E	18
HMC233G8	18
HMC234C8	18
HMC239AS8E	18
HMC240A	18
HMC241LP3E	19
HMC241QS16E	19
HMC244G16	19
HMC245QS16E	19
HMC247	17
HMC252QS24E	19
HMC253LC4	19
HMC253QS24E	19
HMC256	13
HMC258	16
HMC258LC3B	16
HMC258LM3	16
HMC260	15
HMC260LC3B	15
HMC263	8
HMC263LP4E	8
HMC264	16
HMC264LC3B	16
HMC264LM3	16
HMC265	16
HMC265LM3	16
HMC266	16
HMC270MS8GE	18
HMC271ALP4E	12
HMC272AMS8E	15
HMC273MS10GE	12
HMC274QS16E	12
HMC276LP4E	19
HMC276QS24E	19
HMC277MS8E	15
HMC284MS8GE	18
HMC286E	7
HMC287MS8E	20
HMC288MS8E	11
HMC290E	11
HMC291E	11
HMC292	15
HMC292LC3B	15
HMC292LM3C	15
HMC304MS8E	14
HMC305ALP4E	12
HMC306MS10E	12
HMC307QS16GE	12
HMC308E	9
HMC310MS8GE	7
HMC311LP3E	8
HMC311SC70E	8
HMC311ST89E	8
HMC313E	8
HMC316MS8E	14
HMC318MS8GE	7
HMC320MS8GE	7
HMC321LP4E	19
HMC322	19
HMC322LP4E	19
HMC326MS8GE	9
HMC327MS8GE	9
HMC329	15
HMC329LC3B	15
HMC329LM3	15
HMC331	39
HMC333E	15
HMC334LP4E	15
HMC335G16	12
HMC336MS8GE	18
HMC337	16
HMC338	16
HMC338LC3B	16
HMC339	16
HMC340ALP5E	15
HMC341	8
HMC341LC3B	8
HMC342	7
HMC342LC4	7
HMC344	19
HMC344LC3	19
HMC344LH5	19
HMC344LP3E	19
HMC345LP3E	19
HMC346	11
HMC346C8	11
HMC346G8	11
HMC346LC3B	11
HMC346LP3E	11
HMC346MS8GE	11
HMC347	18
HMC347C8	18
HMC347G8	18
HMC347LP3E	18
HMC348LP3E	19
HMC349LP4CE	18
HMC349MS8GE	18
HMC351S8E	14
HMC358MS8GE	40
HMC361	38
HMC361G8	38
HMC361S8GE	38
HMC362	38
HMC362S8GE	38
HMC363	38
HMC363G8	38
HMC363S8GE	38
HMC365	38
HMC365G8	38
HMC365S8GE	38
HMC368LP4E	38
HMC369LP3E	38
HMC370LP4E	39
HMC374E	7
HMC374SC70E	7
HMC377QS16GE	15
HMC380QS16GE	15
HMC381LP6E	15
HMC383	9
HMC383LC4	9
HMC384LP4E	40
HMC385LP4E	40
HMC386LP4E	40
HMC387MS8E	14
HMC388LP4E	40
HMC389LP4E	40
HMC390LP4E	40
HMC391LP4E	40
HMC392	7
HMC392LC4	7
HMC392LH5	7
HMC393MS8GE	19
HMC394LP4E	38
HMC395	8
HMC396	8
HMC397	8
HMC398QS16GE	41
HMC399MS8E	14
HMC400MS8E	14
HMC401QS16GE	41
HMC402MS8E	14
HMC404	14
HMC405	8
HMC406MS8GE	9
HMC407MS8GE	9
HMC408LP3E	10
HMC409LP4E	10
HMC410AMS8GE	15
HMC411MS8GE	15
HMC412AMS8GE	15
HMC413QS16GE	9
HMC416LP4E	40
HMC420QS16E	15
HMC421QS16E	15
HMC422MS8E	15
HMC423MS8E	15
HMC424	12
HMC424G16	12
HMC424LH5	12
HMC424LP3E	12
HMC425	12
HMC425LP3E	12
HMC426MS8E	38
HMC427LP3E	19
HMC429LP4E	40
HMC430LP4E	40
HMC431LP4E	40
HMC432E	38
HMC433E	38
HMC434E	38
HMC435MS8GE	18
HMC437MS8GE	38
HMC438MS8GE	38
HMC439QS16GE	38
HMC440QS16GE	39
HMC441	9
HMC441LC3B	9
HMC441LH5	9
HMC441LM1	9
HMC441LP3E	9
HMC442	9
HMC442LC3B	9
HMC442LM1	9
HMC443LP4E	39
HMC444LP4E	39
HMC445LP4E	39
HMC446E	19
HMC447LC3	38
HMC448	39
HMC448LC3B	39
HMC449	39
HMC449LC3B	39
HMC451	9
HMC451LC3	9
HMC451LP3E	9
HMC452QS16GE	9
HMC452ST89E	9
HMC453QS16GE	9
HMC453ST89E	9
HMC454ST89E	9
HMC457QS16GE	9
HMC459	11
HMC460	10
HMC460LC5	10
HMC462	10
HMC462LP5E	10
HMC463	10
HMC463LH250	10
HMC463LP5E	10
HMC464	11
HMC464LP5E	11
HMC465	10
HMC465LP5E	10
HMC466LP4E	41
HMC467LP3E	11
HMC468LP3E	11
HMC469MS8GE	8
HMC470LP3E	12
HMC471MS8GE	8
HMC472LP4E	12
HMC473MS8E	11
HMC474MP86E	8
HMC474SC70E	8
HMC475ST89E	8
HMC476MP86E	8
HMC476SC70E	8
HMC478MP86E	8
HMC478SC70E	8
HMC478ST89E	8
HMC479MP86E	8
HMC479ST89E	8
HMC480ST89E	8
HMC481MP86E	8
HMC481ST89E	8
HMC482ST89E	8
HMC483MS8GE	14
HMC485MS8GE	14
HMC486	10
HMC486LP5E	10
HMC487LP5E	10
HMC488MS8GE	15
HMC489LP5E	10
HMC490	7
HMC490LP5E	7
HMC491LP3E	7
HMC492LP3E	38
HMC493LP3E	38
HMC494LP3E	38
HMC495LP3E	16
HMC496LP3E	16
HMC497LP4E	16
HMC498	9
HMC498LC4	9
HMC499	9
HMC499LC4	9
HMC500LP3E	17
HMC504LC4B	7
HMC505LP4E	41
HMC506LP4E	41
HMC507LP5E	41
HMC508LP5E	41
HMC509LP5E	41
HMC510LP5E	41
HMC511LP5E	41
HMC512LP5E	41
HMC513LP5E	41
HMC514LP5E	41
HMC515LP5E	41
HMC516	7
HMC516LC5	7
HMC517	8
HMC517LC4	8
HMC518	8
HMC519	8
HMC519LC4	8
HMC520	13
HMC520LC4	13
HMC521	13
HMC521LC4	13
HMC522	13
HMC522LC4	13
HMC523	13
HMC523LC4	13
HMC524	13
HMC524LC3B	13
HMC525	13
HMC525LC4	13
HMC526	13
HMC526LC4	13
HMC527	13
HMC527LC4	13
HMC528	13
HMC528LC4	13
HMC529LP5E	41
HMC530LP5E	41
HMC531LP5E	41
HMC532LP4E	41
HMC533LP4E	41
HMC534LP5E	41
HMC535LP4E	41
HMC536LP2E	19
HMC536MS8GE	19
HMC538LP4E	17
HMC539LP3E	12
HMC540LP3E	11
HMC541LP3E	11
HMC542ALP4E	12
HMC543	17
HMC543LC4B	17
HMC544E	19
HMC545E	18
HMC546LP2E	19
HMC546MS8GE	19
HMC547LC3	19
HMC547LP3E	18
HMC548LP3E	7
HMC549MS8GE	9
HMC550E	18
HMC551LP4E	14
HMC552LP4E	14
HMC553	15
HMC553LC3B	15
HMC554	15
HMC554LC3B	15
HMC555	13
HMC556	13
HMC557	16
HMC557LC4	16
HMC558	16
HMC558LC3B	16
HMC559	11
HMC560	15
HMC560LM3	15
HMC561	38
HMC561LP3E	38
HMC562	10
HMC564	7
HMC564LC4	7
HMC565	7
HMC565LC5	7
HMC566	8
HMC566LP4E	8
HMC567LC5	14
HMC570	14
HMC570LC5	14
HMC571	14
HMC571LC5	14
HMC572	14
HMC572LC5	14
HMC573LC3B	38
HMC574MS8E	19
HMC575LP4E	38
HMC576	39
HMC576LC3B	39
HMC577LC4B	39
HMC578	39
HMC578LC3B	39
HMC579	39
HMC580ST89E	8
HMC581LP6E	15
HMC582LP5E	41
HMC583LP5E	41
HMC584LP5E	41
HMC585MS8GE	14
HMC586LC4B	41
HMC587LC4B	41
HMC588LC4B	41
HMC589ST89E	8
HMC590	10
HMC590LP5E	10
HMC591	10
HMC591LP5E	10
HMC592	10
HMC593LP3E	7
HMC595E	19
HMC596LP4E	19
HMC597LP4E	16
HMC598	39
HMC599ST89E	9
HMC600LP4E	18
HMC601LP4E	18
HMC602LP4E	18
HMC603MS10E	12
HMC603QS16E	12
HMC604LP3E	7
HMC605LP3E	7
HMC606	11
HMC606LC5	11
HMC607	18
HMC607G7	18

Part Number Index

Part #	Page#
HMC608LC4	9
HMC611	18
HMC611LP4E	18
HMC612LP4E	18
HMC613LC4B	18
HMC615LP4E	14
HMC616LP3E	7
HMC617LP3E	7
HMC618LP3E	7
HMC619	11
HMC619LP5E	11
HMC620	13
HMC620LC4	13
HMC621LP4E	15
HMC622LP4E	15
HMC623LP4E	15
HMC624LFLP4E	12
HMC624LP4E	12
HMC625HFLP5E	20
HMC625LP5E	20
HMC626LP5E	20
HMC627LP5E	20
HMC628LP4E	20
HMC629LP4E	11
HMC630LP3E	16
HMC631LP3E	17
HMC632LP5E	41
HMC633	10
HMC633LC4	10
HMC634	10
HMC634LC4	10
HMC635	11
HMC635LC4	11
HMC636ST89E	8
HMC637	11
HMC637LP5E	11
HMC639ST89E	8
HMC641	19
HMC641LC4	19
HMC641LP4E	19
HMC642	17
HMC642LC5	17
HMC643	17
HMC643LC5	17
HMC644	17
HMC644LC5	17
HMC646LP2E	19
HMC647	17
HMC647LP6E	17
HMC648	17
HMC648LP6E	17
HMC649	17
HMC649LP6E	17
HMC650	17
HMC651	17
HMC652	17
HMC652LP2E	17
HMC653	17
HMC653LP2E	17
HMC654	17
HMC654LP2E	17
HMC655	17
HMC655LP2E	17
HMC656	17
HMC656LP2E	17
HMC657	17
HMC657LP2E	17
HMC658	17
HMC658LP2E	17
HMC659	11
HMC659LC5	11
HMC660LC4B	28
HMC661LC4B	28
HMC662LP3E	18
HMC663LC3	15
HMC665LP4E	15
HMC666LP4E	14
HMC667LP2E	7
HMC668LP3E	7
HMC669LP3E	7
HMC674LC3C	27
HMC674LP3E	27
HMC675LC3C	27
HMC675LP3E	27
HMC676LC3C	27
HMC676LP3E	27
HMC677G32	30
HMC677LP5E	30
HMC678LC3C	29
HMC679LC3C	29
HMC680LP4E	20
HMC681LP5E	20
HMC682LP6CE	15
HMC683LP6CE	15
HMC684LP4E	14
HMC685LP4E	14
HMC686LP4E	14
HMC687LP4E	14
HMC688LP4E	14
HMC689LP4E	14
HMC690	31
HMC693	10
HMC694	20
HMC694LP4E	20
HMC695LP4E	39
HMC696LP4E	16
HMC697LP4E	16
HMC698LP5E	39
HMC699LP5E	39
HMC700LP4E	39
HMC701LP6CE	39
HMC702LP6CE	39
HMC703LP4E	39
HMC704LP4E	39
HMC705LP4E	38
HMC706LC3C	29
HMC707LP5E	20
HMC708LP5E	20
HMC709LC5	14
HMC710LC5	14
HMC711LC5	16
HMC712	11
HMC712LP3CE	11
HMC713LP3E	18
HMC713MS8E	18
HMC715LP3E	7
HMC716LP3E	7
HMC717LP3E	7
HMC718LP4E	7
HMC719LP4E	7
HMC720LP3E	29
HMC721LC3C	29
HMC721LP3E	29
HMC722LC3C	29
HMC722LP3E	29
HMC723LC3C	29
HMC723LP3E	29
HMC724LC3C	29
HMC725LC3C	29
HMC726LC3C	29
HMC727LC3C	29
HMC728LC3C	29
HMC729LC3C	29
HMC732LC4B	41
HMC733LC4B	41
HMC734LP5E	41
HMC735LP5E	41
HMC736LP4E	41
HMC737LP4E	41
HMC738LP4E	41
HMC739LP4E	41
HMC740ST89E	9
HMC741ST89E	9
HMC742HFLP5E	20
HMC742LP5E	20
HMC743LP6CE	20
HMC744LC3C	29
HMC745LC3	29
HMC746LC3C	29
HMC747LC3C	29
HMC748LC3C	29
HMC749LC3C	29
HMC750LP4E	30
HMC751LC4	8
HMC752LC4	8
HMC753LP4E	7
HMC754S8GE	9
HMC755LP4E	9
HMC756	10
HMC757	10
HMC757LP4E	10
HMC758LP3E	7
HMC759LP3E	12
HMC760LC4B	28
HMC764LP6CE	40
HMC765LP6CE	40
HMC767LP6CE	40
HMC769LP6CE	40
HMC770LP4BE	9
HMC772LC4	7
HMC773	15
HMC773LC3B	15
HMC774	15
HMC774LC3B	15
HMC775LC5	13
HMC778LP6CE	40
HMC783LP6CE	40
HMC784MS8GE	19
HMC785LP4E	14
HMC786LP4	14
HMC787LC3B	16
HMC788LP2E	8
HMC789ST89E	9
HMC792LP4E	12
HMC794LP3E	38
HMC795LP5E	16
HMC797	11
HMC797LP5E	11
HMC798LC4	16
HMC799LP3E	31
HMC800LP3E	11
HMC801LP3E	11
HMC802LP3E	11
HMC807LP6CE	40
HMC812LC4	11
HMC813	18
HMC813LC4B	18
HMC814	39
HMC814LC3B	39
HMC815LC5	14
HMC816LP4E	7
HMC817LP4E	7
HMC818LP4E	7
HMC819LC5	14
HMC820LP6CE	40
HMC821LP6CE	40
HMC822LP6CE	39, 40
HMC824LP6CE	39
HMC826LP6CE	40
HMC828LP6CE	40
HMC829LP6GE	40
HMC830LP6GE	40
HMC831LP6CE	40
HMC832LP6GE	40
HMC833LP6GE	40
HMC834LP6GE	40
HMC835LP6GE	40
HMC836LP6CE	40
HMC837LP6CE	40
HMC838LP6CE	39, 40
HMC839LP6CE	40
HMC840LP6CE	40
HMC841LC4B	29
HMC842LC4B	29
HMC843LC4B	29
HMC844LC4B	30
HMC847LC5	30
HMC848LC5	30
HMC849LP4CE	18
HMC850LC3C	29
HMC851LC3C	30
HMC852LC3C	29
HMC853LC3C	29
HMC854LC5	30
HMC855LC5	30
HMC856LC5	27
HMC857LC5	27
HMC858LC4B	29
HMC859LC3	29
HMC860LP3E	12, 28, 38
HMC861LP3E	38
HMC862LP3E	38
HMC863	10
HMC863LP4E	10
HMC864	10
HMC865LC3C	30
HMC866LC3C	30
HMC869LC5	14
HMC870LC5	30
HMC871LC5	30
HMC872LP4E	38
HMC873LP4E	39
HMC874LC3C	27
HMC875LC3C	27
HMC876LC3C	27
HMC877LC3	17, 27
HMC879LP4E	38
HMC881LP5E	13
HMC882LP5E	13
HMC890LP5E	12
HMC891LP5E	12
HMC892LP5E	12
HMC893LP5E	12
HMC894LP5E	12
HMC895LP4E	12
HMC896LP4E	12
HMC897	12
HMC897LP4E	12
HMC898LP4E	12
HMC899	12
HMC899LP4E	12
HMC900LP5E	13, 30
HMC902	7
HMC902LP3E	7
HMC903	7
HMC903LP3E	7
HMC904LC5	14
HMC905LP3E	38
HMC906	10
HMC907	11
HMC907LP5E	11
HMC908LC5	14
HMC909LP4E	18
HMC910LC4B	27
HMC911LC4B	27
HMC913	18
HMC913LC4B	18
HMC914LP4E	30
HMC915LP4E	14
HMC916LP3E	39
HMC917LP3E	39
HMC920LP5E	28
HMC921LP4E	9
HMC922LP4E	18
HMC924LC5	14
HMC925LC5	14
HMC926LP5E	20
HMC928LP5E	17
HMC929LP4E	17
HMC930	11
HMC931LP4E	17
HMC932LP4E	17
HMC933LP4E	17
HMC934LP5E	17
HMC935LP5E	17
HMC936LP6E	17
HMC939	12
HMC939LP4E	12
HMC940LC4B	29
HMC941	11
HMC941LP4E	12
HMC942LP4E	39
HMC943LP5E	10
HMC944LC4	19
HMC948LP3E	18
HMC949	10
HMC950	10
HMC951LP4E	14
HMC952	10
HMC952LP5GE	10
HMC953LC4B	29
HMC954LC4B	30
HMC955LC4B	30
HMC958LC5	29
HMC959LC3	29
HMC960LP4E	13, 30
HMC962LC4	7
HMC963LC4	7
HMC965LP5E	10
HMC966LP4E	14
HMC967LP4E	14
HMC968	10
HMC969	10
HMC972LP5E	20
HMC973LP3E	11
HMC974LC3C	27
HMC976LP3E	12, 28, 38
HMC977LP4E	14
HMC980	29
HMC980LP4E	29
HMC981	28
HMC981LP3E	28
HMC983LP5E	38, 39
HMC984LP4E	38, 39
HMC985	11
HMC985LP4KE	11
HMC986	19
HMC987LP5E	30, 34
HMC988LP3E	34
HMC990LP4E	15
HMC992LP5E	12
HMC993LP5E	12
HMC994	9
HMC994LP5E	11
HMC995LP5GE	10
HMC996LP4E	20
HMC997LC4	20
HMC998	9
HMC998LP5E	9
HMC999	7, 9
HMC1000LP5E	13
HMC1010LP4E	18
HMC1013LP4E	18
HMC1014	9
HMC1015	15
HMC1016	9
HMC1018LP4E	11
HMC1019LP4E	11
HMC1020LP4E	18
HMC1021LP4E	18
HMC1022	11
HMC1023LP5E	13, 30
HMC1024	10
HMC1027BG	27
HMC1029	4, 10
HMC1030LP5E	18
HMC1031MS8E	34
HMC1032LP6GE	34
HMC1033LP6GE	34
HMC1034LP6GE	34
HMC1035LP6GE	34
HMC1040LP3CE	8
HMC1041LC4	13
HMC1042LC4	13, 14, 16
HMC1043LC3	15
HMC1044LP3E	13, 38
HMC1048LC3B	15
HMC1049	10
HMC1049LP5E	10
HMC1050	30
HMC1051	31
HMC1053	10
HMC1055LP2CE	18
HMC1056LP4BE	13
HMC1057	14
HMC1058	16
HMC1060LP3E	12, 28, 38
HMC1061LC5	28
HMC1063LP3E	13, 14, 16
HMC1065LP4E	14
HMC1068	30
HMC1069	30
HMC1081	15
HMC1084LC4	19
HMC1086	7
HMC1086F10	7
HMC1087	7
HMC1087F10	7
HMC1090LP3E	15
HMC1097LP4E	16
HMC1190LP6GE	19
HMC1197LP7FE	20
HMC3653LP3BE	8
HMC5850BG	31
HMC6000	19
HMC6000LP711E	19
HMC6001	19
HMC6001LP711E	19
HMC6146BLC5A	14
HMC6147ALC5A	14
HMC6282A	30
HMC6545LP5	31
HMC6590	31
HMC6620BG	31
HMC6787ALC5A	14
HMC6981LS6	10
HMC7150LP3DE	30
HMC9000	28, 50
HMC-ABH209	9
HMC-ABH241	9

Part Number Index

Part #	Page#
HMC-ABH264	9
HMCAD1040-40	28
HMCAD1040-80	28
HMCAD1041-40	28
HMCAD1041-80	28
HMCAD1050-40	28
HMCAD1050-80	28
HMCAD1051-40	28
HMCAD1051-80	28
HMCAD1062	28
HMCAD1062B	28
HMCAD1063	28
HMCAD1073	28
HMCAD1100	27
HMCAD1101	28
HMCAD1102	28
HMCAD1104	27
HMCAD1510	27
HMCAD1511	27
HMCAD1512	27
HMCAD1520	27
HMCAD5831LP9BE	28
HMC-ALH102	10
HMC-ALH140	8
HMC-ALH216	8
HMC-ALH244	8
HMC-ALH310	8
HMC-ALH311	8
HMC-ALH313	8
HMC-ALH364	8
HMC-ALH369	8
HMC-ALH376	8
HMC-ALH382	8
HMC-ALH435	7
HMC-ALH444	7
HMC-ALH445	8
HMC-ALH476	8
HMC-ALH482	10
HMC-ALH508	8
HMC-ALH509	8
HMC-APH196	9
HMC-APH403	9
HMC-APH460	10
HMC-APH462	10
HMC-APH473	10
HMC-APH478	10
HMC-APH510	9
HMC-APH518	10
HMC-APH596	9
HMC-APH608	10
HMC-APH633	9
HMC-APH634	9
HMC-AUH232	10
HMC-AUH249	10
HMC-AUH256	9
HMC-AUH312	10
HMC-AUH317	9
HMC-AUH318	9
HMC-AUH320	9
HMC-C001	43
HMC-C002	43
HMC-C003	43
HMC-C004	43
HMC-C005	44
HMC-C006	44
HMC-C007	44
HMC-C009	44
HMC-C010	44
HMC-C011	45
HMC-C014	44
HMC-C015	44
HMC-C016	43
HMC-C017	43
HMC-C018	43
HMC-C019	45
HMC-C020	43
HMC-C021	43
HMC-C022	43
HMC-C023	43
HMC-C024	43
HMC-C025	43
HMC-C026	43
HMC-C027	43
HMC-C028	45
HMC-C029	45
HMC-C030	45
HMC-C031	44
HMC-C032	44
HMC-C033	44
HMC-C034	44
HMC-C035	44
HMC-C036	43
HMC-C037	43
HMC-C038	43
HMC-C039	44
HMC-C040	44
HMC-C041	44
HMC-C042	44
HMC-C043	44
HMC-C044	44
HMC-C045	43
HMC-C046	44
HMC-C047	44
HMC-C048	43
HMC-C049	44
HMC-C050	43
HMC-C051	44
HMC-C053	43
HMC-C055	44
HMC-C056	44
HMC-C058	45
HMC-C059	43
HMC-C060	44
HMC-C061	44
HMC-C062	44
HMC-C064	44
HMC-C065	44
HMC-C070	45
HMC-C071	45
HMC-C072	43
HMC-C073	45
HMC-C074	43
HMC-C075	43
HMC-C076	43
HMC-C077	43
HMC-C078	44
HMC-C079	43
HMC-C083	45
HMC-C088	44
HMC-C200	43
HMC-DK001	50
HMC-DK002	50
HMC-DK003	50
HMC-DK005	50
HMC-DK006	50
HMC-DK008	50
HMC-MDB169	15
HMC-MDB171	13
HMC-MDB172	13
HMC-MDB207	13
HMC-MDB218	14
HMC-MDB277	15
HMC-SDD112	19
HMC-T2000	48
HMC-T2100	48
HMC-T2220	48
HMC-T2220B	48
HMC-T2240	48
HMC-T2270	48
HMC-VVD102	11
HMC-VVD104	11
HMC-VVD106	11
HMC-XDB112	39
HMC-XTB110	39

NOTES

Hittite Microwave Worldwide Sales Offices

Corporate Headquarters

Hittite Microwave Corporation
USA Corporate Headquarters
Phone: 978-250-3343
Fax: 978-250-3373
sales@hittite.com

Hittite Microwave International Limited
International Headquarters
Phone: +353-21-240-7996
Fax: +353-21-240-7997
hmi@hittite.com

Americas

Northeast
Boston, MA
Phone: 978-270-3167
usa-east-north@hittite.com

Southeast
Washington D.C.
Phone: 312-485-8730
usa-east-south@hittite.com

Central
Dallas, TX
Phone: 817-727-7146
usa-south@hittite.com

Southwest
Los Angeles, CA
Phone: 626-961-5602
usa-west@hittite.com

Northwest
San Jose, CA
Phone: 978-518-1792
usa-west-north@hittite.com

Europe, Middle East & Africa

United Kingdom, Spain & Portugal
Hittite Microwave Europe Limited
Phone: +44-7811-267418
Fax: +353-21-240-7997
europe@hittite.com

Ireland, Greece & Turkey
Hittite Microwave International Limited
Phone: +353-21-240-7996
Fax: +353-21-240-7997
hmi@hittite.com

Benelux
Hittite Microwave Deutschland GmbH
Phone: +49-8031-97654
Fax: +49-8031-98883
germany@hittite.com

France & Italy
Hittite Microwave Sarl
Phone: +33-6-0716-8079
Fax: +353-21-240-7997
france@hittite.com

Denmark, Finland, Norway & Sweden
Hittite Microwave Nordic AB
Phone: +46-761-763969
nordic@hittite.com

Finland Office
Phone: +358(0)45-320-2626
finland@hittite.com

Central & Eastern Europe
Hittite Microwave Deutschland GmbH
Phone: +49-8031-97654
Fax: +49-8031-98883
germany@hittite.com

Asia & Pacific

Australia & New Zealand
Hittite Microwave International Limited
Phone: +353-21-240-7996
Fax: +353-21-240-7997
hmi@hittite.com

India
Hittite Microwave India Pvt. Ltd.
Phone: +91-40-44311254
Fax: +91-40-44311100
india@hittite.com

Japan
Hittite GK
Phone: +81-3-5652-5772
Fax: +81-3-5652-6694
japan@hittite.com

Korea
Hittite Microwave Asia Co., Limited
Phone: +82-2559-0638
Fax: +82-2559-0639
korea@hittite.com

China
Hittite Microwave Co., Limited
Shanghai Office
Phone: +86-21-6209-8809
Fax: +86-21-6209-6730
china@hittite.com

Shenzhen Office
Phone: +86-755-3322-2116
Fax: +86-755-3322-2117
shenzhen@hittite.com

Beijing Office
Phone: +86-10-6485 9219
Fax: +86-10-6485 0377
beijing@hittite.com

Xi'an Office
Phone: +86-29-8885-7651
Fax: +86-29-8450-3797
china@hittite.com

Sales Representatives

Americas

Northeast
Eastern Canada:
Repwave
Ottawa, Quebec & Maritimes:
+1-613-270-9811
Toronto & Southern Ontario:
+1-647-883-7360

New England:
Microwave Marketing Specialist
978-392-0110

Western NY:
Zimmerman Sales
585-381-3186

E. CT, Metro NYC, LI & No. NJ:
Comp Tech
973-832-4545

Southeast
DC, MD, VA & WV:
Vincent Pirro Electronics
410-961-3663

Delaware, Metro PA & So. NJ:
Omega Electronic Sales, Inc.
215-244-4000

IN, KY, MI, OH & W. PA:
Schillinger Associates, Inc.
765-457-7241

IL & E. WI:
TEQ Sales
847-742-3767

AL, FL, GA, MS, NC, SC & TN:
Precision Marketing Inc.
954-752-1700

Central
IA:
Essig & Associates
319-363-8703

AK, KS, LA, W. MO, OK, TX:
Quad State Sales & Marketing
972-669-8567

MN, ND, SD & W. WI:
Matrix Design Technology
952-400-1070

CO, ID, MT, UT & WY:
Innovation Sales
303-652-3030

Southwest
Argentina & Brazil:
Vermont Rep. Com. Ltd
+55-11-3726-6655

Mexico:
Quad State Sales and Marketing
972-669-8567

AZ & NM:
Saguaro Technical Sales, Inc.
480-947-3724

So. CA:
Acetec
858-784-0900

HI, So. NV:
Hittite Southwest
626-961-5602

Northwest
Western Canada:
BC, AB, SK & MB:
Repwave
+1-604-929-8541

No. CA & NV:
Custom & Wireless Sales
408-371-0222

OR & WA:
Sea-Port Technical Sales
425-702-8300

Europe, Mid-East & Africa

Germany, Austria, Poland, Switzerland:
MEV Elektronik Service GmbH
+49-5424-2340-28

Czech Republic, Estonia, Hungary, Latvia, Lithuania, Slovakia:
Hittite Microwave Deutschland GmbH
+49-8031-97654

Estonia, Latvia, Lithuania:
Hittite Microwave Nordic AB
+46-761-763969

Belgium, Luxemburg:
Nijkerk Electronics N.V.
+32-3-544-70-66

Bosnia Herzegovina, Bulgaria, Croatia, Macedonia, Romania, Serbia Montenegro & Slovenia:
IC Electronika
+386(0)-1-568-01-18

Denmark:
Acte A/S
+45-46-900-400

Netherlands:
Nijkerk Electronics B.V.
+31-20-504-14-24

Sweden:
RF Partner AB
+46(0)-31-47-51-00

Finland:
LKC OY
+358-400-460-646

France:
L-TEQ Microwave
+33-1-3007-7780

Greece:
Hittite Microwave International Limited
+353-21-240-7996

United Kingdom & Ireland:
Firefly Technology Ltd.
+44-1256-884980

Israel:
Starlight Technologies, Inc.
+972-3-9410555

Italy:
Special-Ind SPA
+39-02-6074741

Norway:
Bredengen AS
+47-2100-9100

Russia:
Radiant-Elcom Ltd.
+7-495-725-0404

Spain & Portugal:
Altaix Electronica S.A.L
+34-91-636-39-39

South Africa:
RF Design CC
+27-21-555-8400

Turkey:
EMPA Electronics
+90-212-465-71-99

Asia & South Pacific

Australia & New Zealand:
Braemac (SA) Pty Ltd.
+61-(0)2-9550-6600

China & Hong Kong:
Alignment Co., Ltd.
+86-755-8253-7068

Gateway Tech Co., Ltd.
+0755-8608-1010

Secom Telecom Co., Ltd.
+86-755-2515-5888

Wai Tat Electronics Ltd.
+852-2799-7393

India:
Syratron Technologies
+91-802-5591107/5591031

Indonesia, Malaysia, Philippines, Singapore & Thailand:
MEDs Technologies, Pte., Ltd.
+65-6453-8313

Japan:

Daito Electron Co., Ltd
+81-3-3237-1471

Hakuto Co., Ltd *(FO & HSL)*
+81-3-3355-7652

Korea:

EZ Hightech
+82-31-382-6500

JS Commtech
+82-2-574-6100

Makus
+82-2-3490-9526

Taiwan R.O.C.:

Bandtek International Co., Ltd.
+886-2-2657-2615

Gateway Tech. Co., Ltd.
+886-2-8751-4918

Instrumentation Sales Representatives

North America

AZ, CO, ID, MO, NM, UT & WY:
Technologies West RMS
602-312-3789

CA & NV:
Tritek Solutions
949-609-0560

OR & WA:
Tritek Northwest
949-609-0560

Europe

Belgium, Luxembourg & Netherlands:
AR Benelux B.V.
+31-172-423-000

Finland, Lithuania, Latvia & Estonia:
Caltest Oy
+358-(09)-530-607-0

Greece:
Vector Technologies, LTD
+30-210-68-58-008

Italy:
Giakova srl
+39-023-3512100

Spain:
AFC Ingenieros, S.A.
+34-91-365-44-05

Turkey:
Spark Olcum Teknolojileri Ltd. Sti
+90-312-466-8212

United Kingdom:
MCS Test Equipment LTD
+8453-62-63-65

Asia

China:
WAT-COM Technologies
+86-755-86233486

Taiwan R.O.C.:
T&E Communication
+886-2-82211259

Japan:
Farad
+81-3-5261-3091

Distributors

Contact Information in How to Buy section on page 3.

Digi-Key CORPORATION

© 2013, Hittite Microwave Corporation, All Rights Reserved.
2 Elizabeth Drive • Chelmsford, MA 01824 • 978-250-3343 tel • 978-250-3373 fax

Boston • Cork • Egypt • Hyderabad • London • Munich • Seoul • Shanghai • Stockholm • Tokyo

Receive the latest product releases at www.hittite.com - click on "My Subscription"